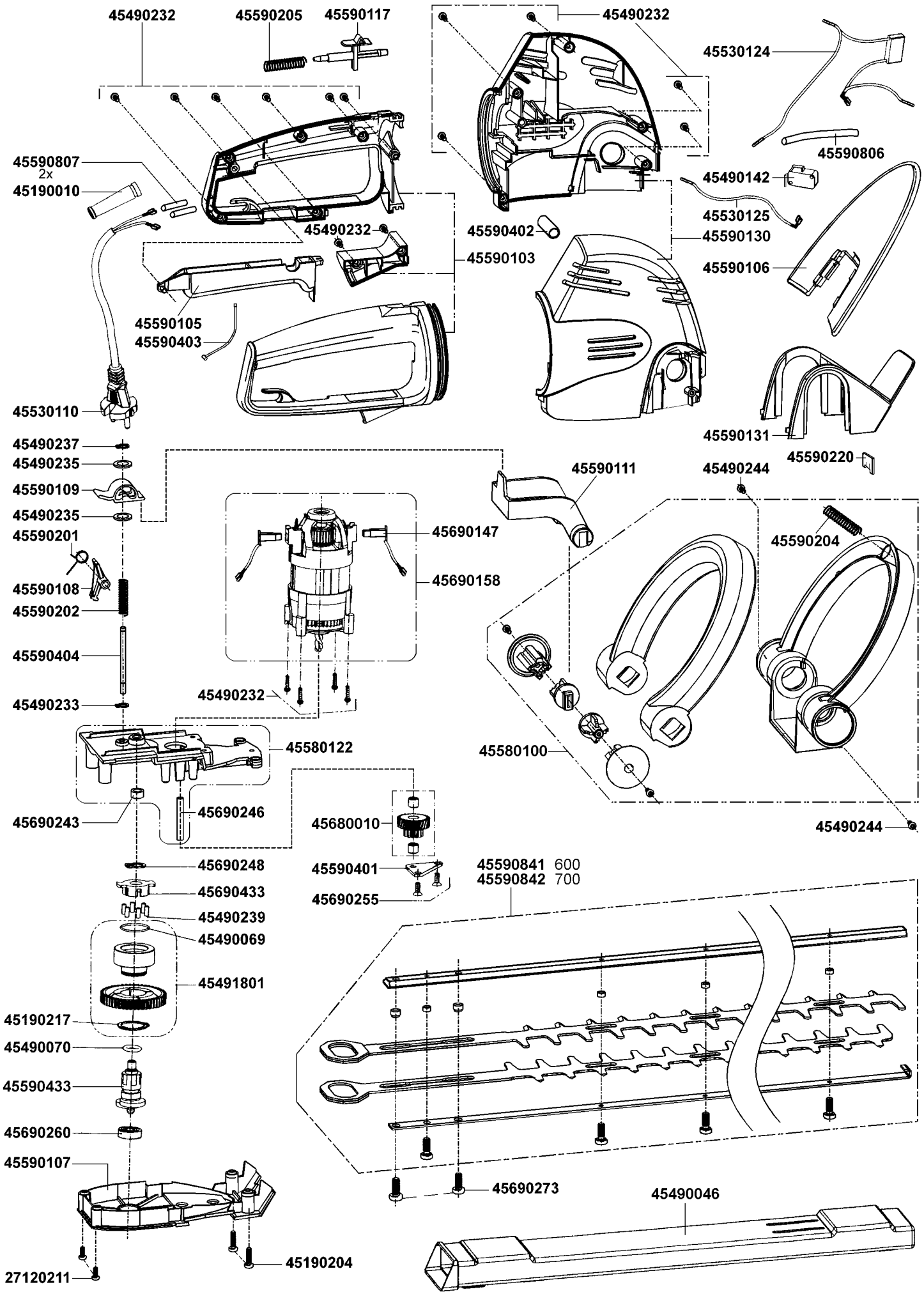HSD 600/700 Profi - Trebol