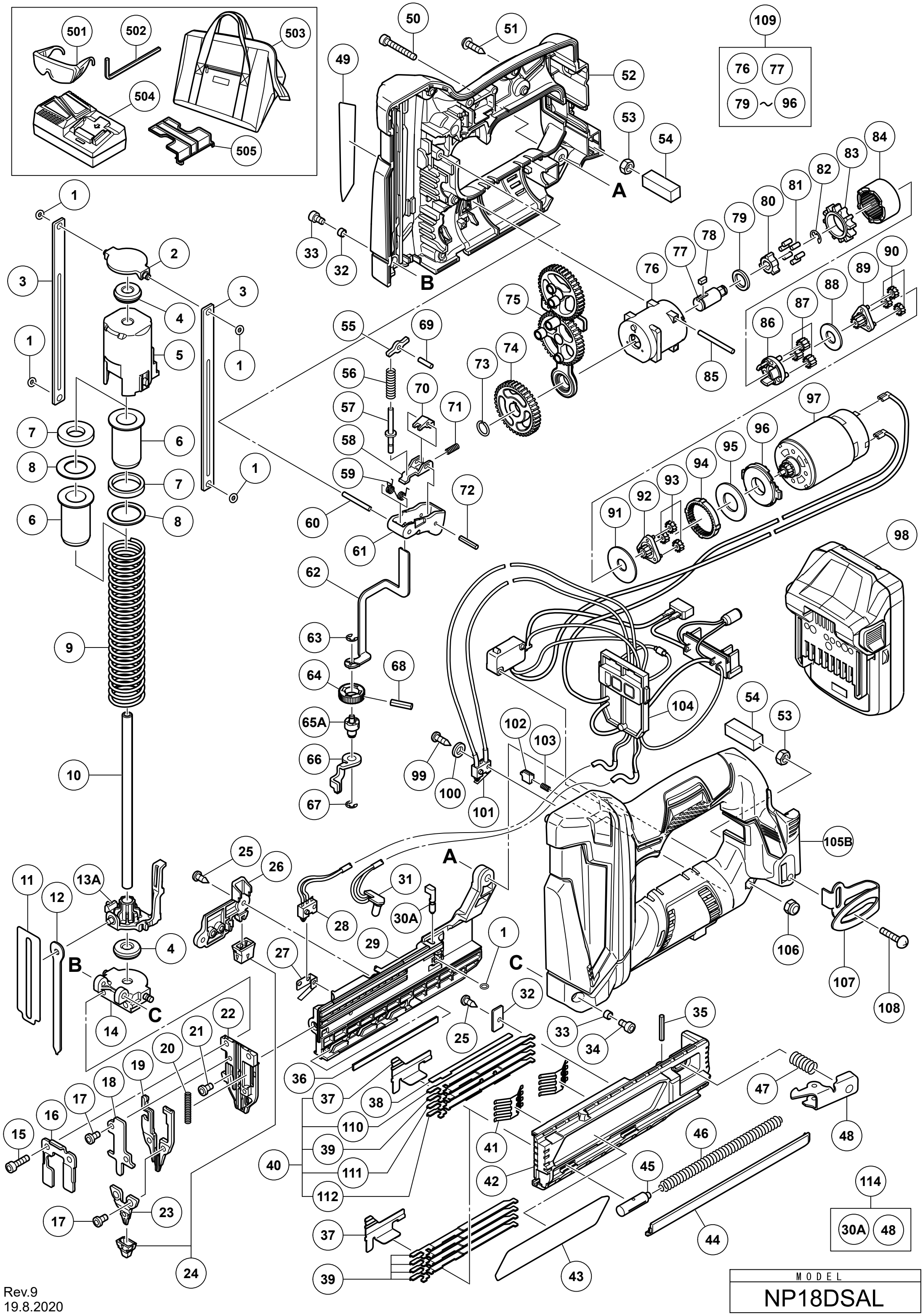

Rev.9
19.8.2020

MODEL
NP18DSAL