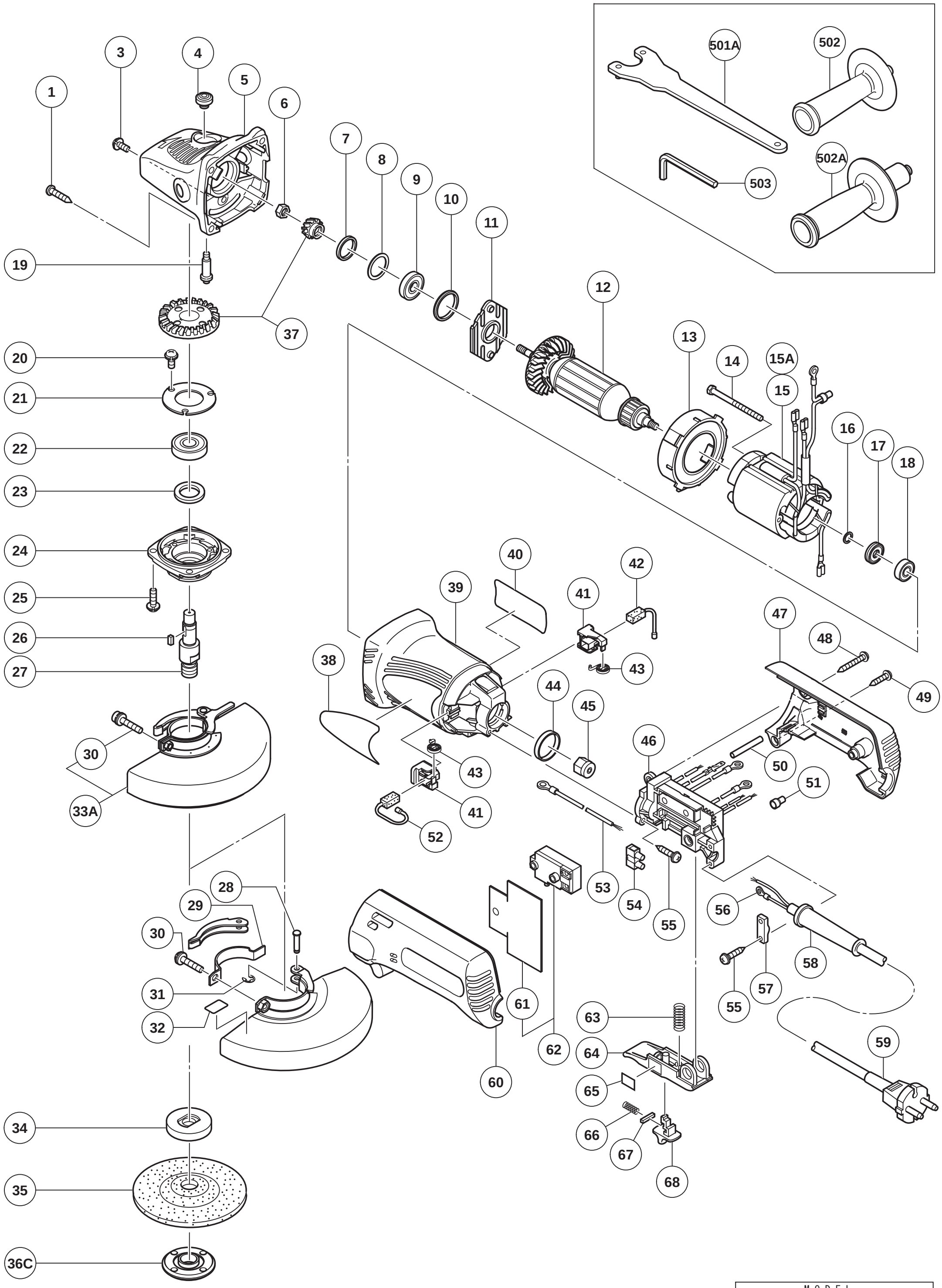

MODEL

G15YC2

Rev.10