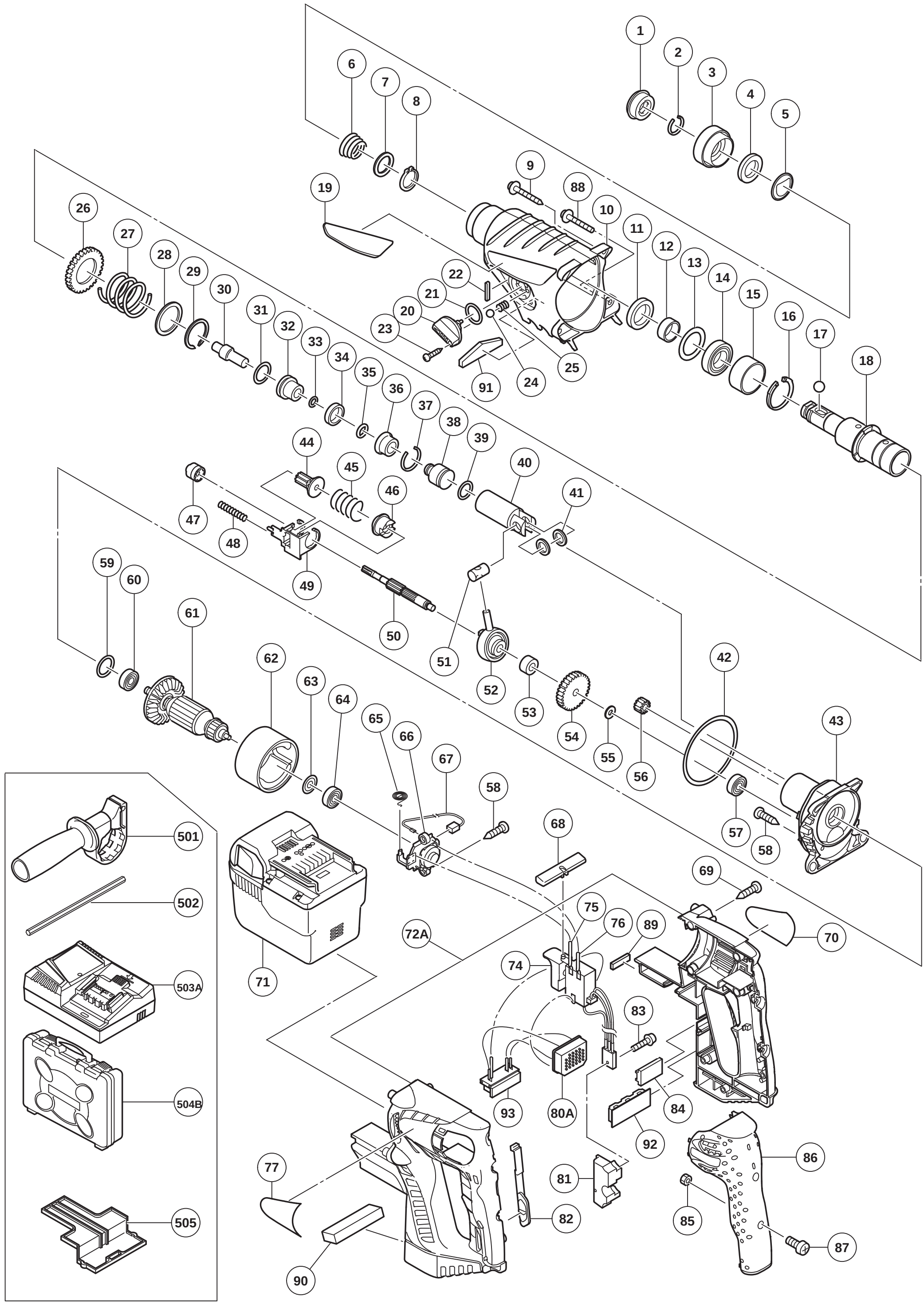

Rev.9

MODEL
DH36DAL