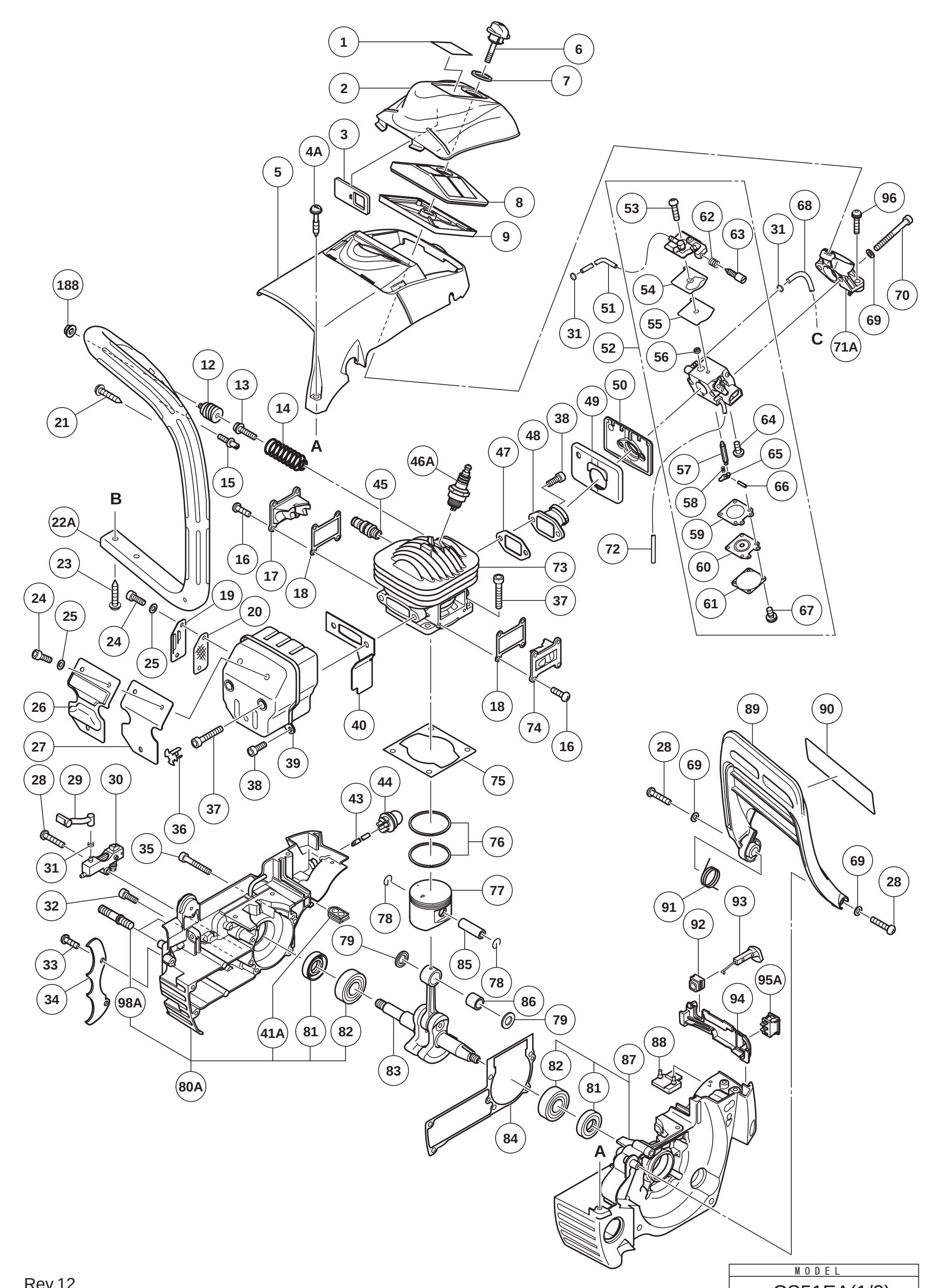

Rev.12

MODEL
CS51EA(1/2)

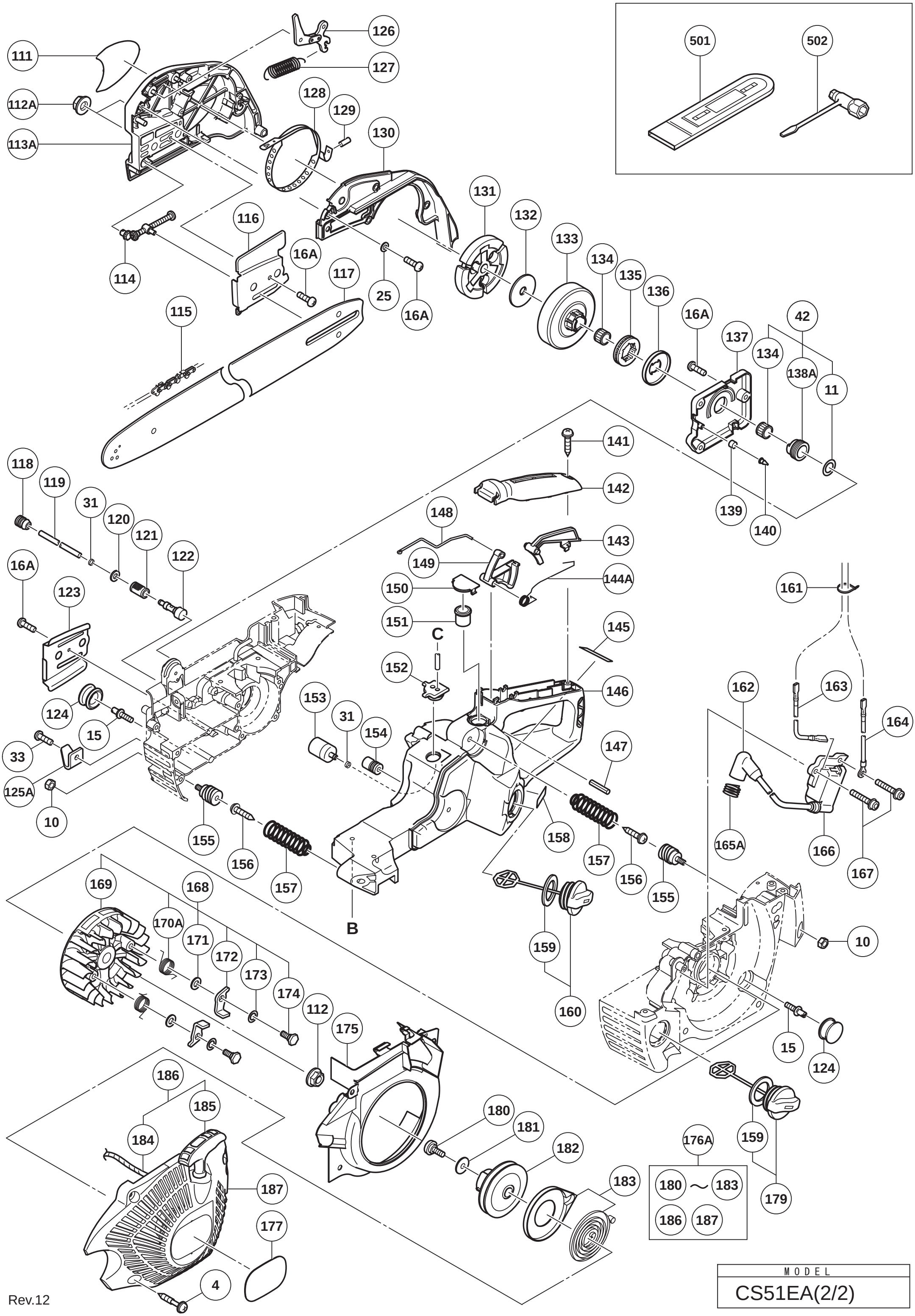

Rev.12

MODEL
CS51EA(2/2)