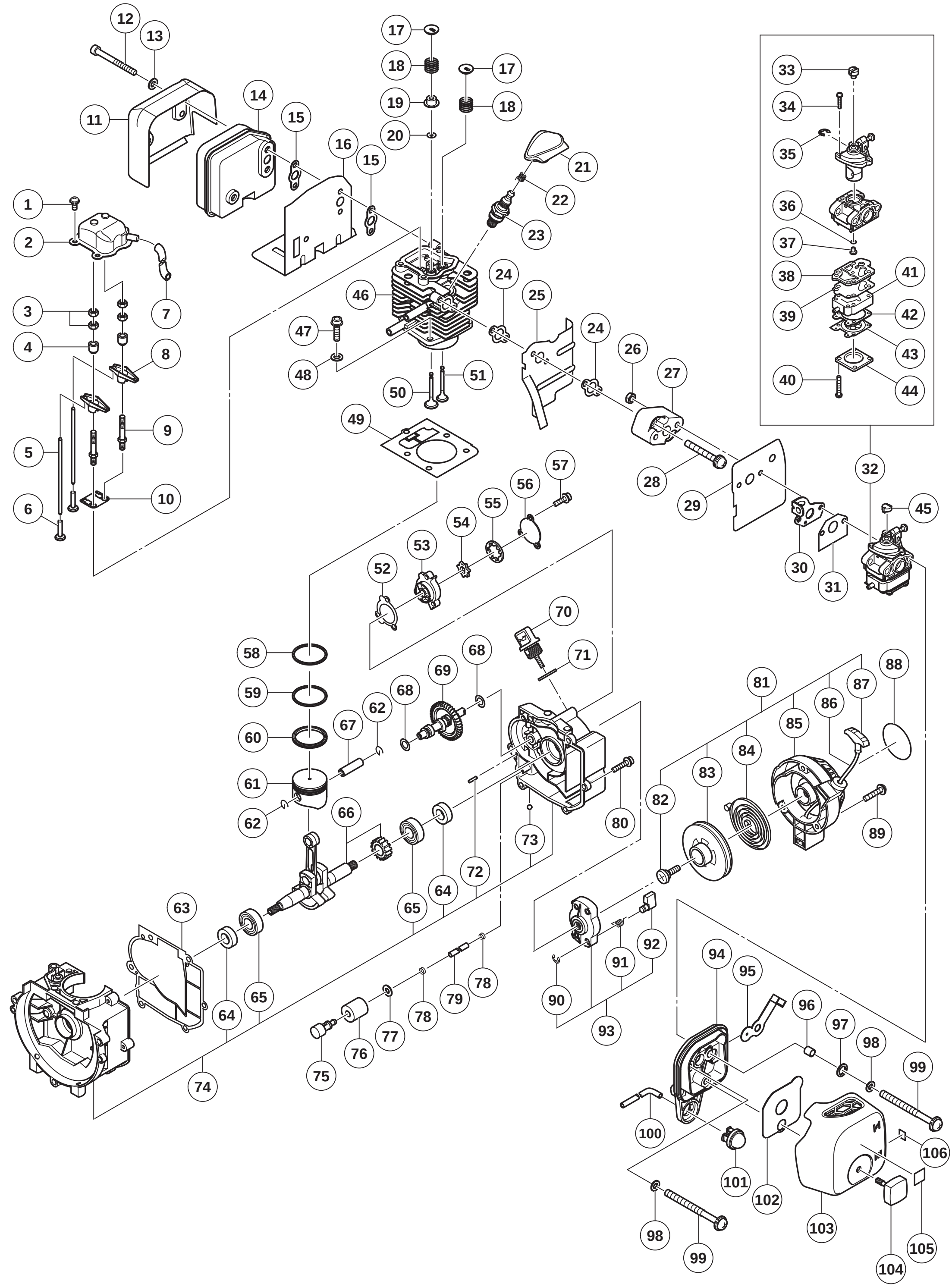

Rev.1

MODEL
CG25EUP2(1/3)

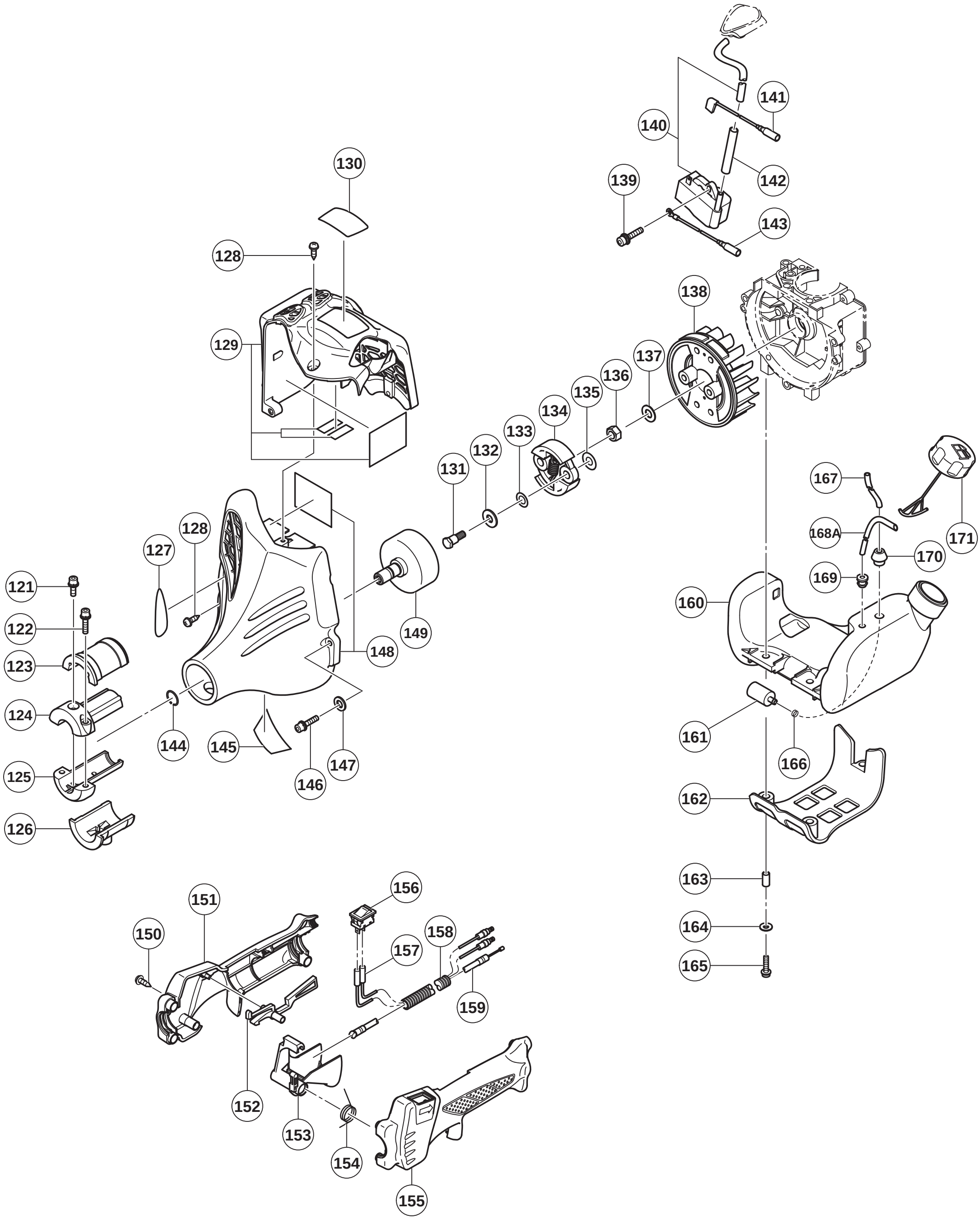

Rev.2

MODEL
CG25EUP2(2/3)

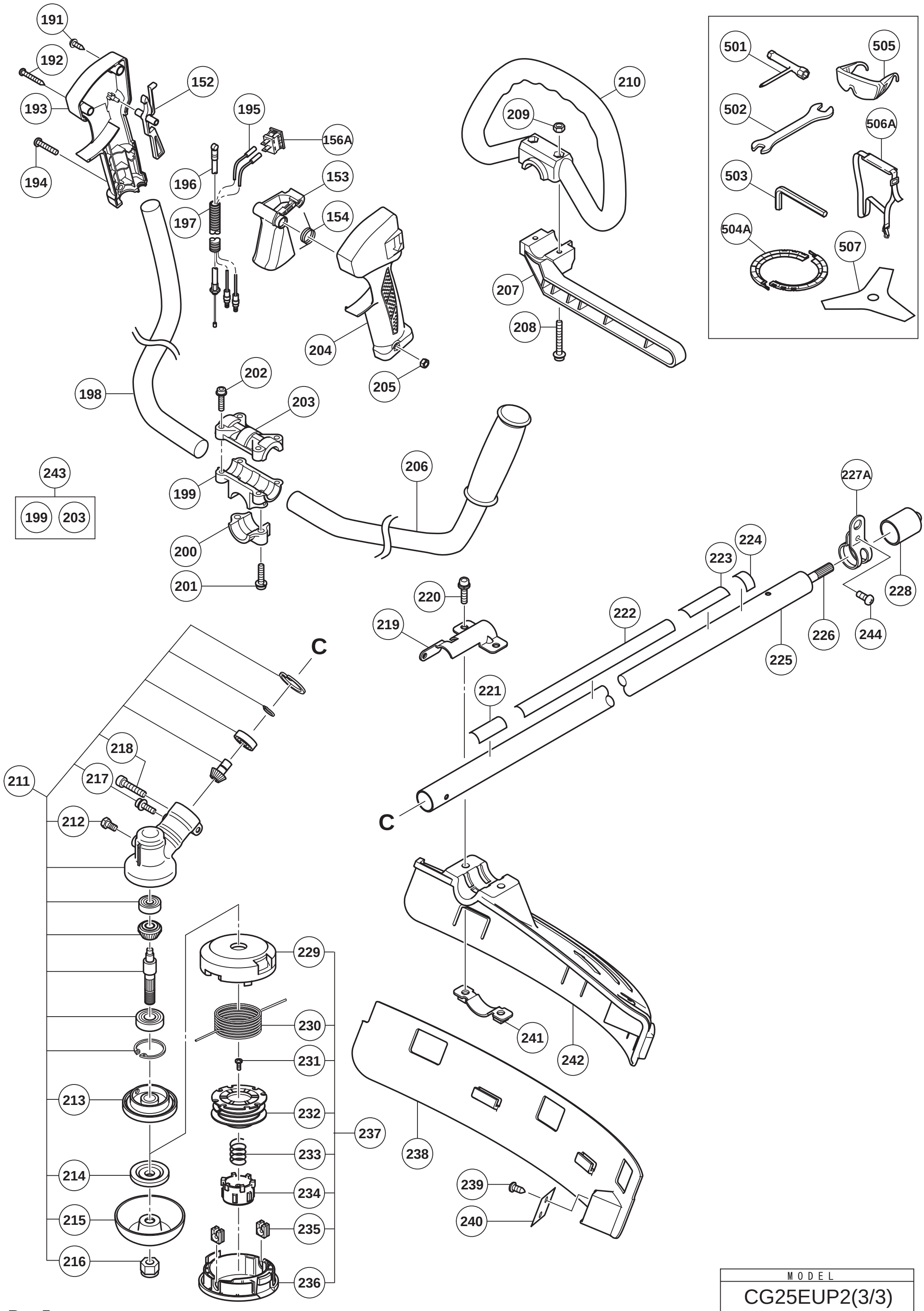

MODEL
CG25EUP2(3/3)

Rev.5