Electrolux

PARTS 2001	9c
	P0201001

MODEL Multitrim 250DX

ILLUSTRATED PARTS LIST

9648571-22	9648571-25	9648571-67	9648571-86
CH	GB,EI	E.Euro	W. Euro

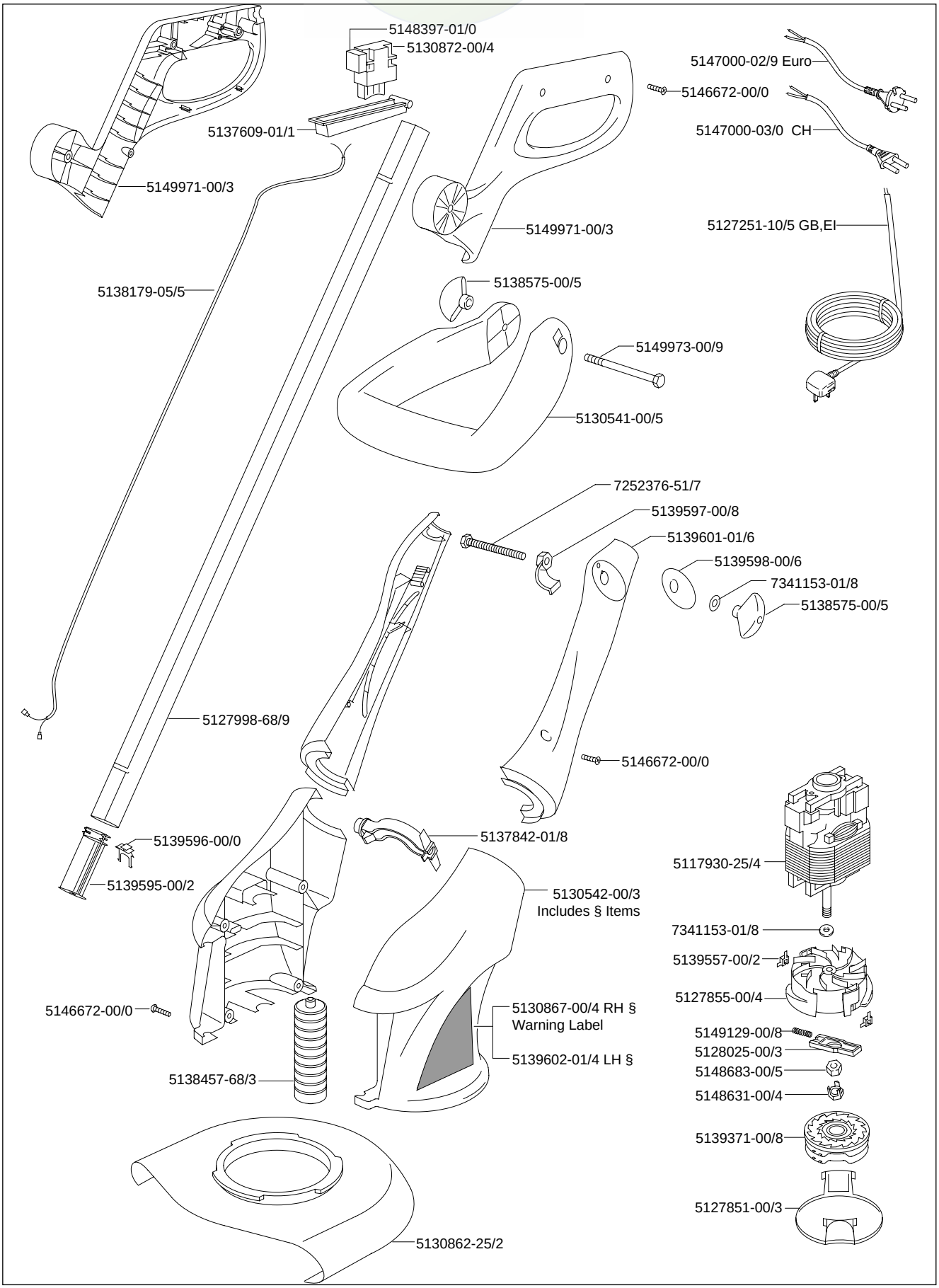

Flymo

Multi-Trim 250 DX

Powerful, electric trimmer and lawn edger with “Unique” Double Line Autofeed cutting line system and extendable handle adjustment

- Simply convert from trim to edge by twisting the cutting head.
- Unique Double Line Autofeed cutting System.
- Extendable handle adjustment for a more comfortable operating position.
- Guide roller for accurate lawn edging.
- Ideal for trimming around those awkward garden areas.
- Adjustable steady handle for greater control.
- Protector guard for added safety.

Features

Cutting Width	25 cm
Motor Power	300 W
Line Length	10m (2 x 5 m)
Line Diameter	1.5 mm
Feed Mechanism	Double Autofeed
Edging Facility	Yes
Carton Dimensions	1140x220x130 mm
Weight (Unpacked)	2.2 Kg
Weight (Packed)	4.1 Kg