PARTS CATALOG

4-STROKE ENGINE

FH721V

PRODUCT CODE	NOTE
FH721V-AS18	ZTR

KAWASAKI HEAVY INDUSTRIES, LTD

P/N 99907-2317-01

PARTS CATALOG INTRODUCTION

This parts catalog lists parts and sub-assemblies provided as service parts.
When it becomes necessary to replace parts, always use KAWASAKI GENUINE PARTS which have passed strict inspection which guarantees quality and performance.

1. HOW TO ORDER PARTS

1) When ordering the parts, be sure to use the parts catalog corresponding to the product code. Check the product revision codes on the product and the catalog.
Product Code (example) : FA130D–AA00
Product Revision Code
2) Specify the part code (all digits) exactly as listed in this catalog on your parts order.
3) The parts not shown in the illustrations of this catalog are not sold separately; only the complete units or next higher assemblies illustrated are supplied as the service parts.

2. EXPLANATION OF PARTS CATALOG FORMAT

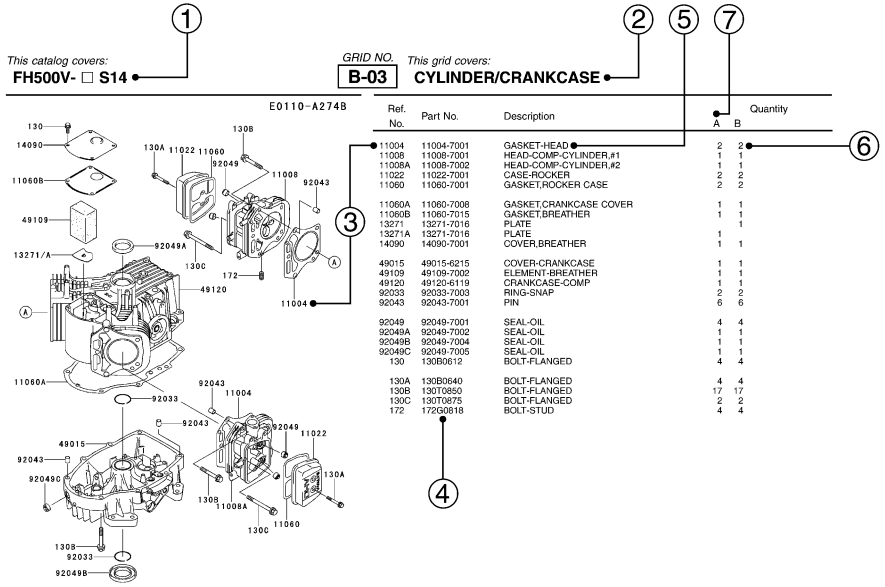

1) Product Code
This code describes the product code covered by this catalog. The product revision code, which is a part of the product code, is omitted.

2) Part Group Title
This title is the representative name for the group of parts illustrated on the page.

3) Reference Number
The reference numbers are shown on the illustration and the list as the link between them.

4) Part Number
This is the key of your parts ordering.
Three kinds of part number are used in this catalog.
a. Structure 1
□□□□□□—□□□□—□□
□□□□□□—□□□□□
Part Revision Code
b. Structure 2
□□□□□—□□□□—□□
Color Code for Painted Part
c. Standard Hardware Number
(for bolts, nuts, washer, or the like)
□□□□□□□□
Size Code
Material and Surface Treatment Code
Item Code

5) Description and Additional Information
The part name, the location, the size, and the serial number as additional information, etc. are described here. Use them to find out and check the part required.
When a part number is changed without change of the product revision code and the changed parts are not interchangeable, the serial number of the product is noted as follows;

(	– FA130 – 100001)	: Affected units are from beginning of the product of the product code up to and including this serial number.
(FA130 – 100002	–)	: Affected units are from this serial number and above.
(FA130 – 100002	– FA130 – 110001)	: Affected units are in this serial number range.

6) Quantity
The figure shows quantity of the part required at the indicated position on the illustration and for the specified product revision code.
The asterisk (*) on this column means the part can be used as the substitute on the product and is supplied until the stock is exhausted.
Note:Some small parts will be supplied by units.
Example: If six (6) bolts are ordered and the minimum quantity per unit is five (5), two (2), units of the bolt will be delivered.

7) Product Revision Code
This Code indicates an important change which affects the service parts interchangeability.

3. ABBREVIATIONS

#.....Number	FR.....Front	RH.....Right Hand
&.....And	G.....Gram	RPM....Revolutions Per Minute
(+).....Plus	HEX.....Hexagonal	RR.....Rear
(–).....Minus	ID=.....Inside Diameter	STD.....Standard
2ND.....Second	IN.....Inch	T.....Teeth
3RD.....Third	L=.....Length	T=.....Thickness
4TH.....Fourth	LH.....Left Hand	U/S.....Under Size
A.....Ampere	LWR.....Lower	UPP.....Upper
AR.....As Required	MM.....Millimeter	V.....Volt
ASSY.....Assembly	O/S.....Over Size	W.....Watt
CNT.....Center	OD=.....Outside Diameter	
COMP.....Complete	REF.....Reference	

This catalog covers:

FH721V- □ S18

GRID NO. **B-01**

This grid covers:

PICTORIAL INDEX

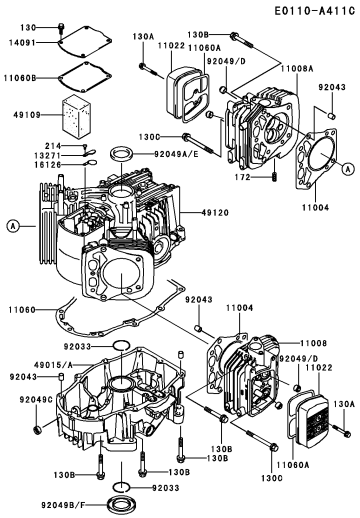

B-03 CYLINDER/CRANKCASE

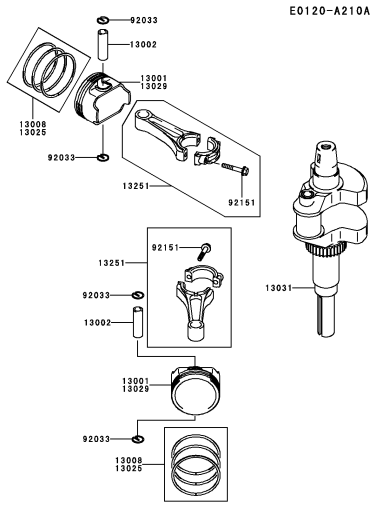

B-04 PISTON/CRANKSHAFT

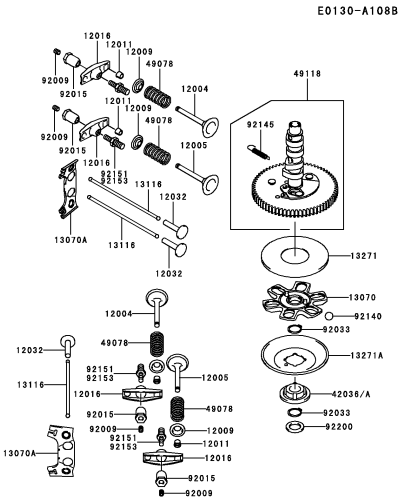

B-05 VALVE/CAMSHAFT

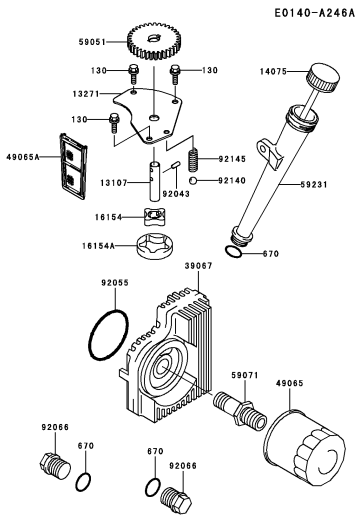

B-06 LUBRICATION-EQUIPMENT

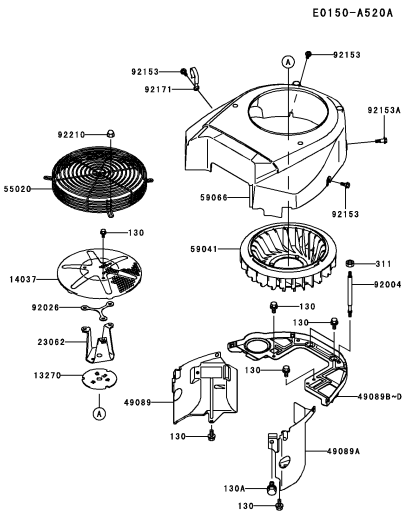

B-07 COOLING-EQUIPMENT

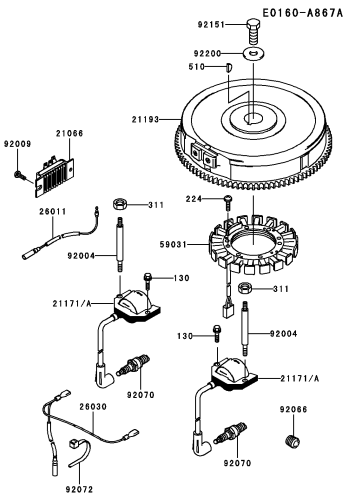

B-08 ELECTRIC-EQUIPMENT

This catalog covers:

FH721V- □ S18

GRID NO. **B-02** *This grid covers:* **PICTORIAL INDEX**

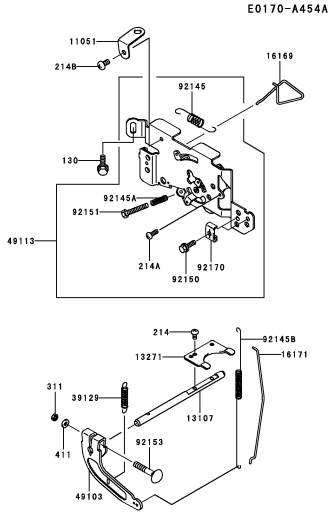

B-09 **CONTROL-EQUIPMENT**

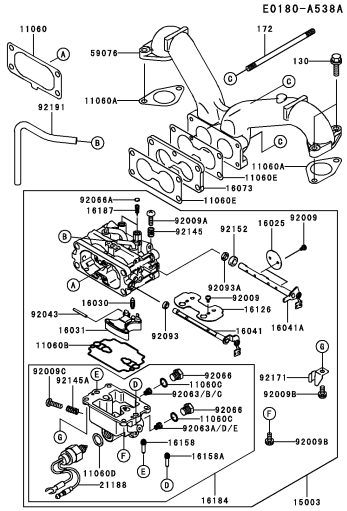

B-10 **CARBURETOR**

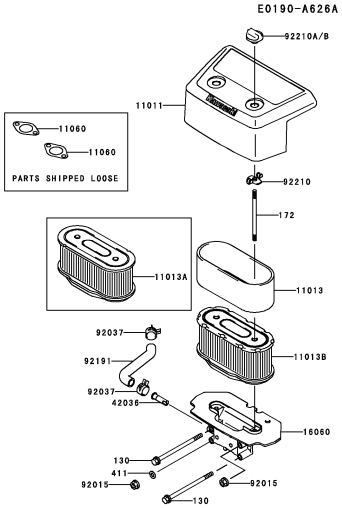

B-11 **AIR-FILTER/MUFFLER**

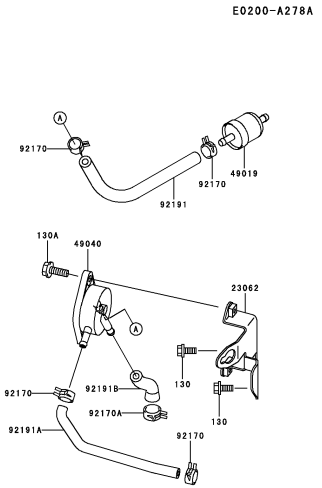

C-03 **FUEL-TANK/FUEL-VALVE**

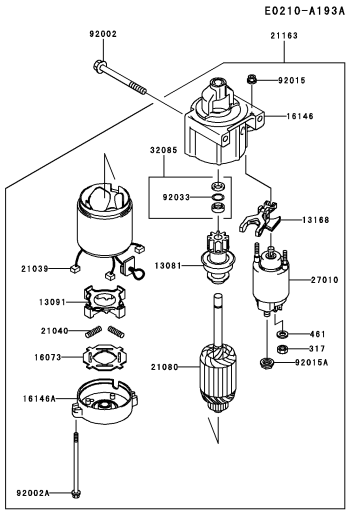

C-04 **STARTER**

This catalog covers:

FH721V- □ S18

GRID NO. **B-03**

This grid covers:

CYLINDER/CRANKCASE

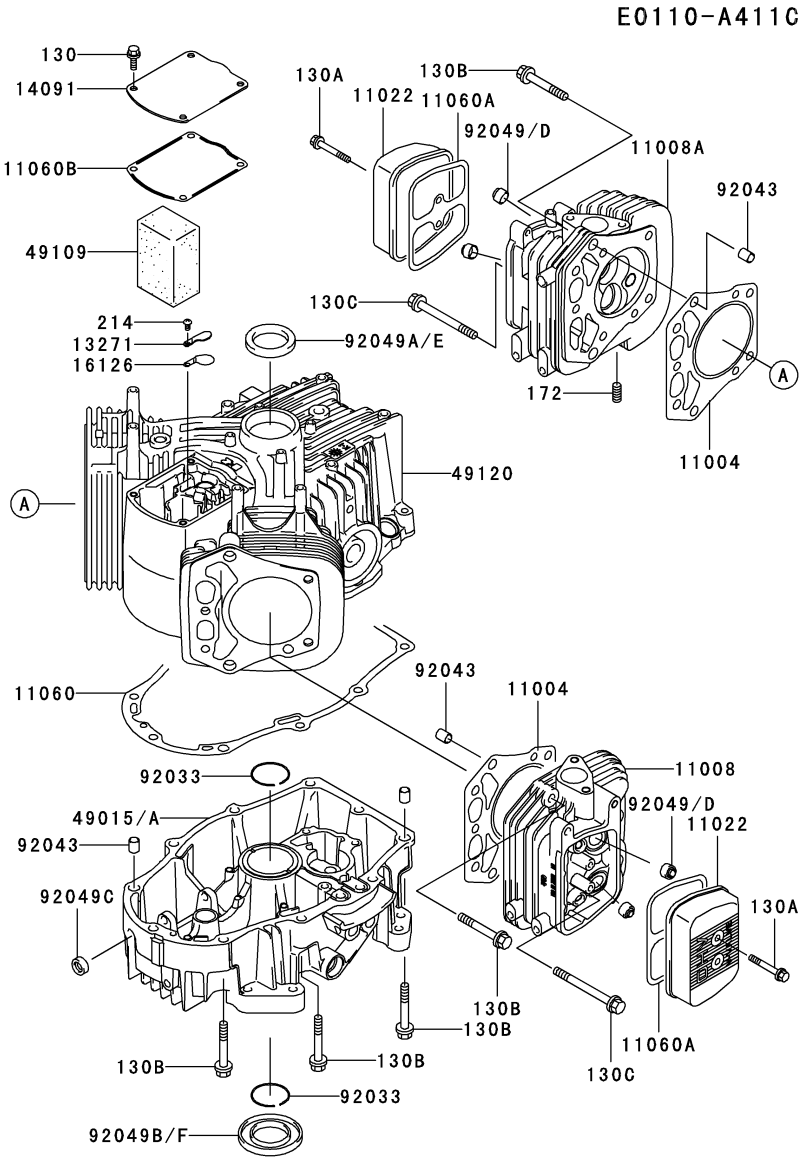

Ref. No.	Part No.	Description	Quantity A
11004	11004-7006	GASKET-HEAD	2
11008	11008-7012	HEAD-COMP-CYLINDER,#2	1
11008A	11008-7013	HEAD-COMP-CYLINDER,#1	1
11022	11022-7002	CASE-ROCKER	2
11060	11060-7012	GASKET,CRANKCASE COVER	1
11060A	11060-7013	GASKET,ROCKER CASE	2
11060B	11060-7014	GASKET,BREATHER	1
13271	13271-7006	PLATE	1
14091	14091-7004	COVER	1
16126	16126-7001	VALVE	1
49015	49015-6225	COVER-CRANKCASE	*
49015A	49015-6255	COVER-CRANKCASE	1
49109	49109-7003	ELEMENT-BREATHER	1
49120	49120-7018	CRANKCASE-COMP	1
92033	92033-7004	RING-SNAP	2
92043	92043-7001	PIN	6
92049	92049-7001	SEAL-OIL,RVC2 6X11X10.2	*
92049A	92049-7002	SEAL-OIL,35-48-8 TC	*
92049B	92049-7004	SEAL-OIL,35-62-8 TC	*
92049C	92049-7005	SEAL-OIL,SO 8X14X5 HS	1
92049D	92049-7009	SEAL-OIL,6X11X10.4	4
92049E	92049-7010	SEAL-OIL,SD 35X48X8 R HS	1
92049F	92049-7011	SEAL-OIL,SD 35X62X8 L HS	1
130	130B0612	BOLT-FLANGED	4
130A	130B0640	BOLT-FLANGED	4
130B	130T0850	BOLT-FLANGED	18
130C	130T0875	BOLT-FLANGED	2
172	172G0818	BOLT-STUD	4
214	214B0408	SCREW-PAN+-	1

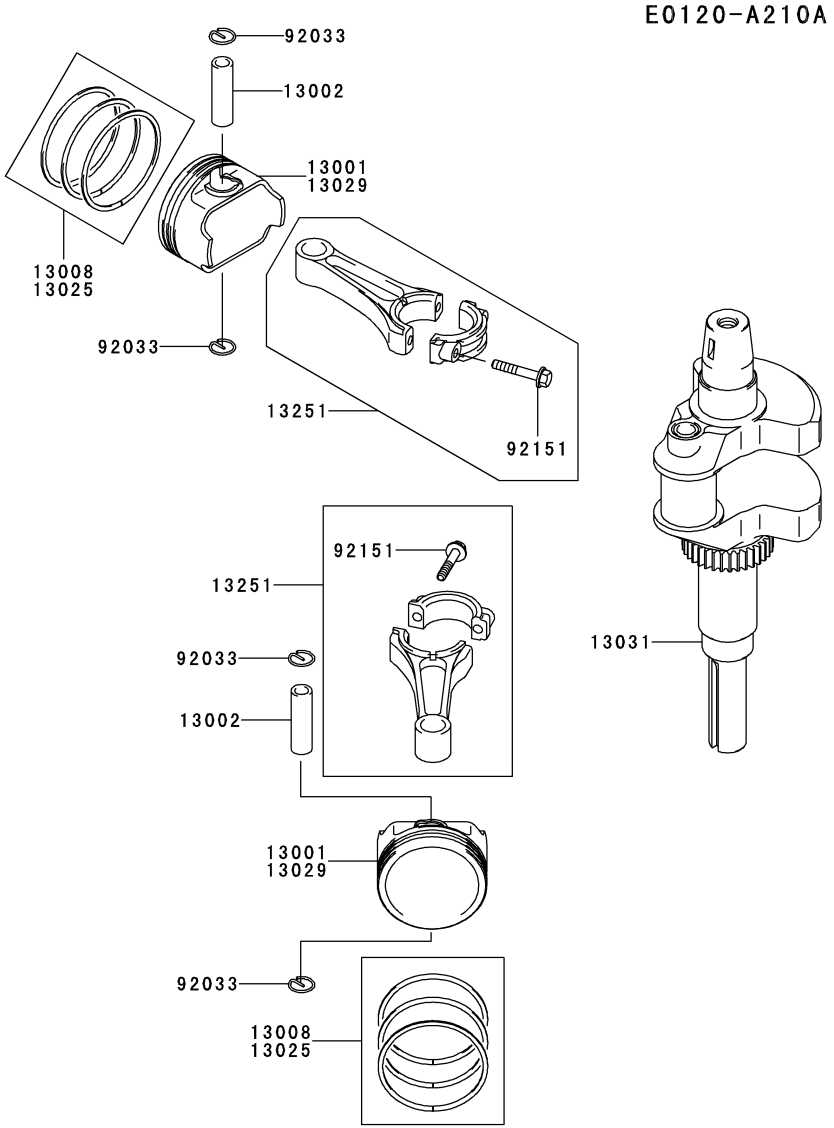

Ref. No.	Part No.	Description	Quantity A
13001	13001-7007	PISTON-ENGINE	2
13002	13002-7001	PIN-PISTON	2
13008	13008-6058	RING-SET-PISTON	2
13025	13025-7002	RING-SET-PISTON L,0.50	AR
13029	13029-7003	PISTON-ENGINE L,0.50	AR
13031	13031-7023	CRANKSHAFT-COMP	1
13251	13251-7005	ROD-ASSY-CONNECTING	2
92033	92033-7005	RING-SNAP	4
92151	92151-7017	BOLT,6X35	4

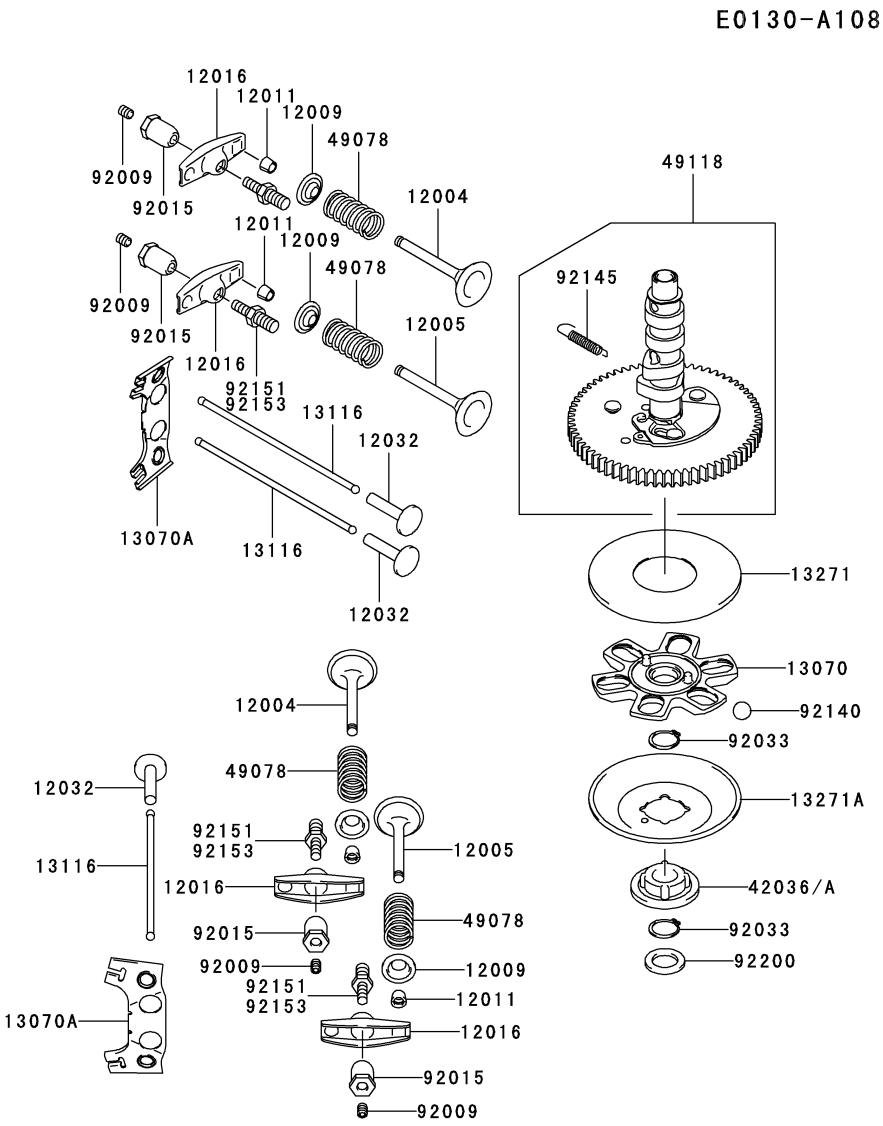

Ref. No.	Part No.	Description	Quantity A
12004	12004-7002	VALVE-INTAKE	2
12005	12005-7004	VALVE-EXHAUST	2
12009	12009-7001	RETAINER-VALVE SPRING	4
12011	12011-2056	COLLET	8
12016	12016-7006	ARM-ROCKER	4
12032	12032-7001	TAPPET	4
13070	13070-7004	GUIDE	1
13070A	13070-7007	GUIDE	2
13116	13116-7002	ROD-PUSH	4
13271	13271-7007	PLATE	1
13271A	13271-7021	PLATE,GOVERNOR	1
42036	42036-7001	SLEEVE	*
42036A	42036-7009	SLEEVE	1
49078	49078-7002	SPRING-ENGINE VALVE	4
49118	49118-7007	CAMSHAFT-COMP	1
92009	92009-2341	SCREW	4
92015	92015-2253	NUT	4
92033	92033-7001	RING-SNAP	2
92140	92140-7002	BALL	6
92145	92145-7001	SPRING	1
92151	92151-7019	BOLT	*
92153	92153-7019	BOLT	4
92200	92200-7001	WASHER	1

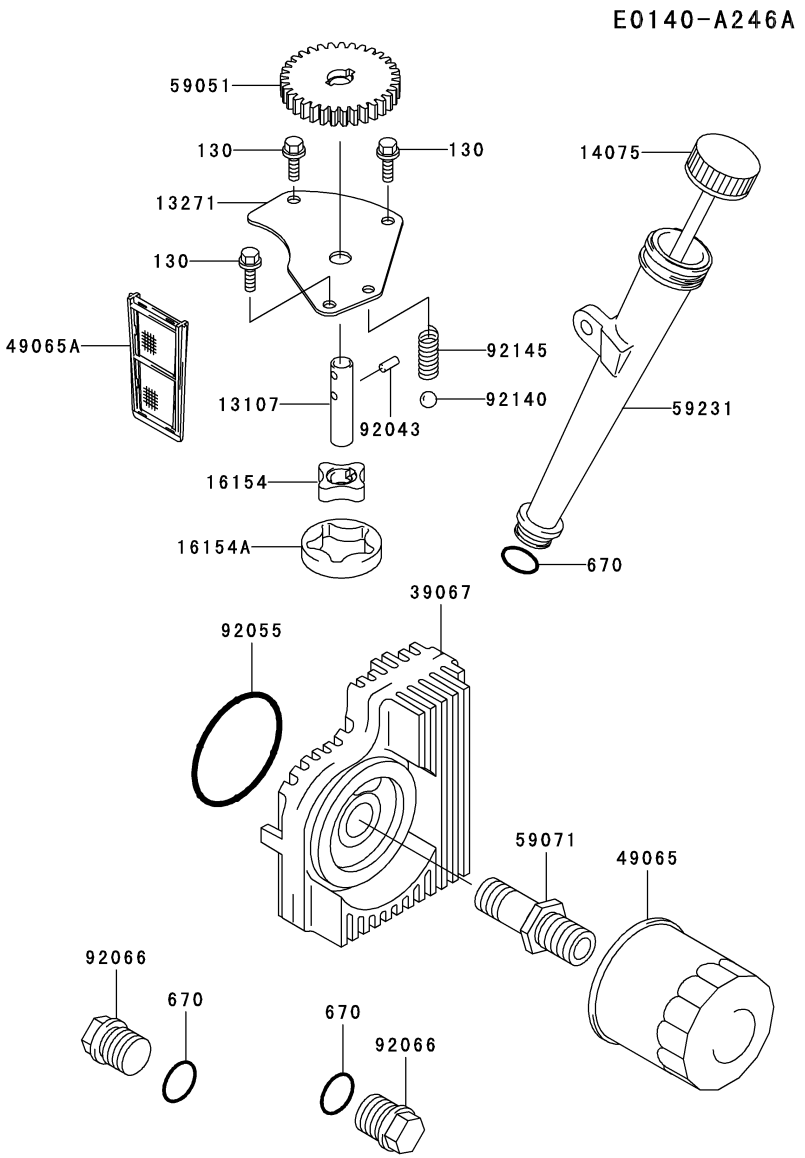

Ref. No.	Part No.	Description	Quantity A
13107	13107-7009	SHAFT	1
13271	13271-7005	PLATE	1
14075	14075-7008	CAP-ASSY	1
16154	16154-2053	ROTOR-PUMP,IN	1
16154A	16154-2054	ROTOR-PUMP,OUT	1
39067	39067-7002	COOLER-OIL	1
49065	49065-2078	FILTER-OIL	1
49065A	49065-7003	FILTER-OIL	1
59051	59051-7011	GEAR-SPUR	1
59071	59071-7009	JOINT	1
59231	59231-7006	FILLER	1
92043	92043-7003	PIN	2
92055	92055-7006	RING-O	1
92066	92066-7003	PLUG	2
92140	92140-7003	BALL	1
92145	92145-7002	SPRING	1
130	130B0612	BOLT-FLANGED	3
670	670D2016	O RING,16MM	3

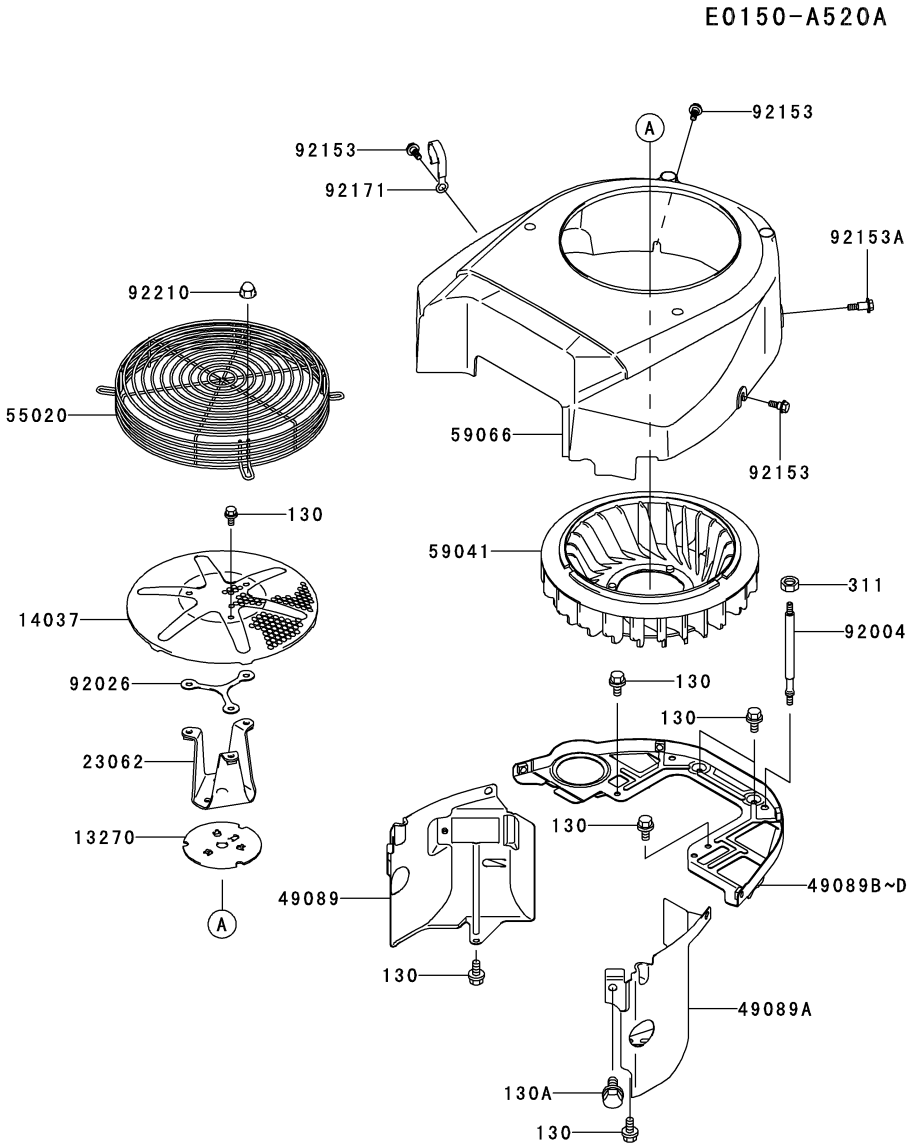

Ref. No.	Part No.	Description	Quantity A
13270	13270-7007	PLATE	1
14037	14037-7008-9H	SCREEN	1
23062	23062-7005	BRACKET-COMP	1
49089	49089-7004	SHROUD-ENGINE	1
49089A	49089-7005	SHROUD-ENGINE	1
49089B	49089-7030	SHROUD-ENGINE	*
49089C	49089-7037	SHROUD-ENGINE	*
49089D	49089-7040	SHROUD-ENGINE	1
55020	55020-7007	GUARD	1
59041	59041-7003	FAN	1
59066	59066-7004	HOUSING-FAN	1
92004	92004-7006	STUD	2
92026	92026-7007	SPACER	AR
92153	92153-7007	BOLT	3
92153A	92153-7008	BOLT	1
92171	92171-7005	CLAMP	1
92210	92210-0003	NUT	4
130	130B0612	BOLT-FLANGED	9
130A	130B0816	BOLT-FLANGED	1
311	311B0600	NUT-HEX	2

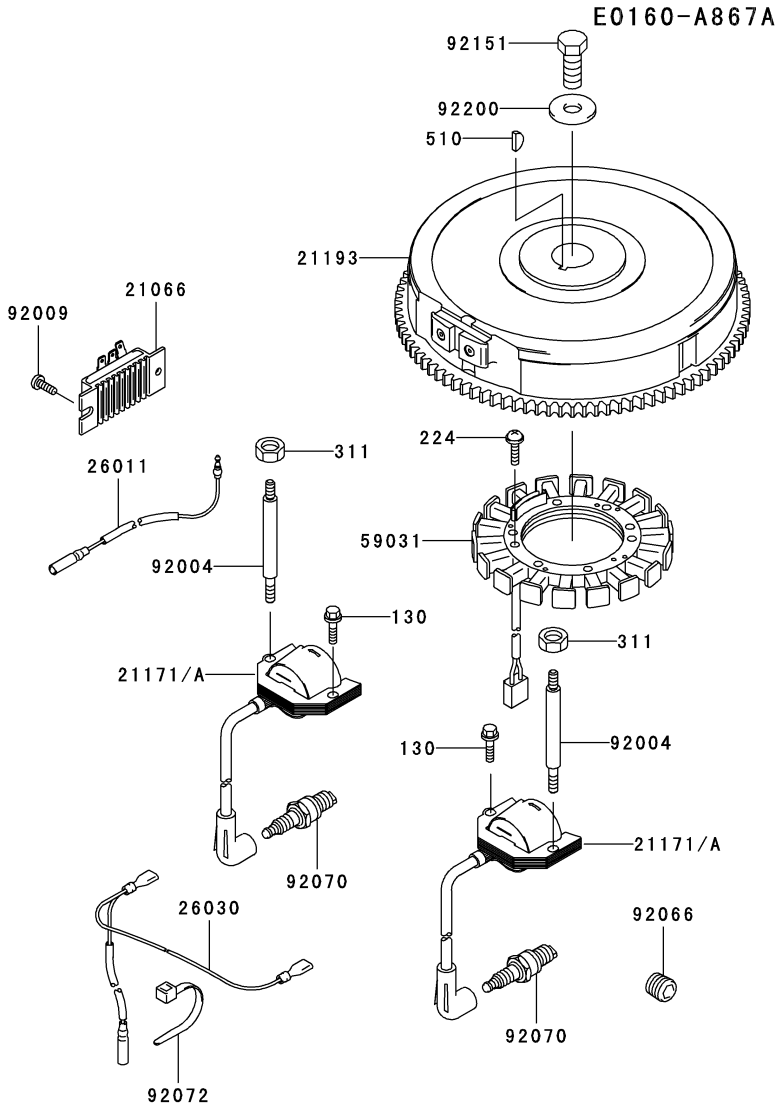

Ref. No.	Part No.	Description	Quantity A
21066	21066-7011	REGULATOR-VOLTAGE	1
21171	21171-7007	COIL-ASSY-IGNITION	*
21171A	21171-7013	COIL-ASSY-IGNITION	2
21193	21193-7020	FLYWHEEL-ASSY	1
26011	26011-7008	WIRE-LEAD,L=540	1
26030	26030-7002	HARNESS	1
59031	59031-7001	COIL-CHARGING	1
92004	92004-7009	STUD	2
92009	92009-2308	SCREW	1
92066	92066-7002	PLUG	1
92070	92070-7004	PLUG-SPARK,BPR4ES(NGK),SOLID	2
92072	92072-7003	BAND	2
92151	92151-2097	BOLT,12X30	1
92200	92200-7002	WASHER	1
130	130B0620	BOLT-FLANGED	2
224	224B0520	SCREW-PAN-WP-CROS	4
311	311B0600	NUT-HEX	2
510	510A5100	KEY-WOODRUFF	1

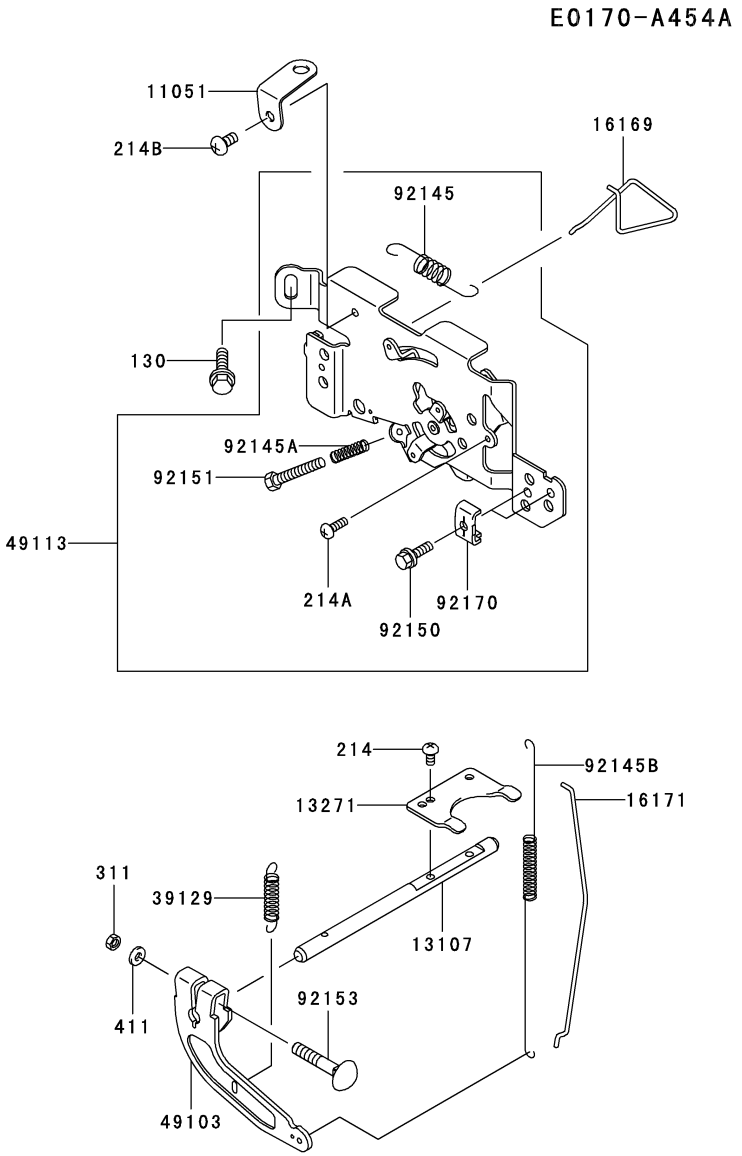

Ref. No.	Part No.	Description	Quantity A
11051	11051-7008	BRACKET	1
13107	13107-7013	SHAFT	1
13271	13271-7018	PLATE	1
16169	16169-7006	LINK-CHOKE	1
16171	16171-7004	LINK	1
39129	39129-7004	SPRING-GOVERNOR	1
49103	49103-7004	ARM-GOVERNOR	1
49113	49113-7017	PANEL-COMP-CONTROL	1
92145	92145-7004	SPRING	1
92145A	92145-7005	SPRING	1
92145B	92145-7009	SPRING	1
92150	92150-2182	BOLT,5X18	2
92151	92151-7014	BOLT,5X30	1
92153	92153-7005	BOLT,6X35	1
92170	92170-7001	CLAMP	2
130	130B0612	BOLT-FLANGED	2
214	214B0408	SCREW-PAN+-	2
214A	214B0412	SCREW-PAN+-	1
214B	214B0510	SCREW-PAN+-	1
311	311B0600	NUT-HEX	1
411	411B0600	WASHER-PLAIN	1

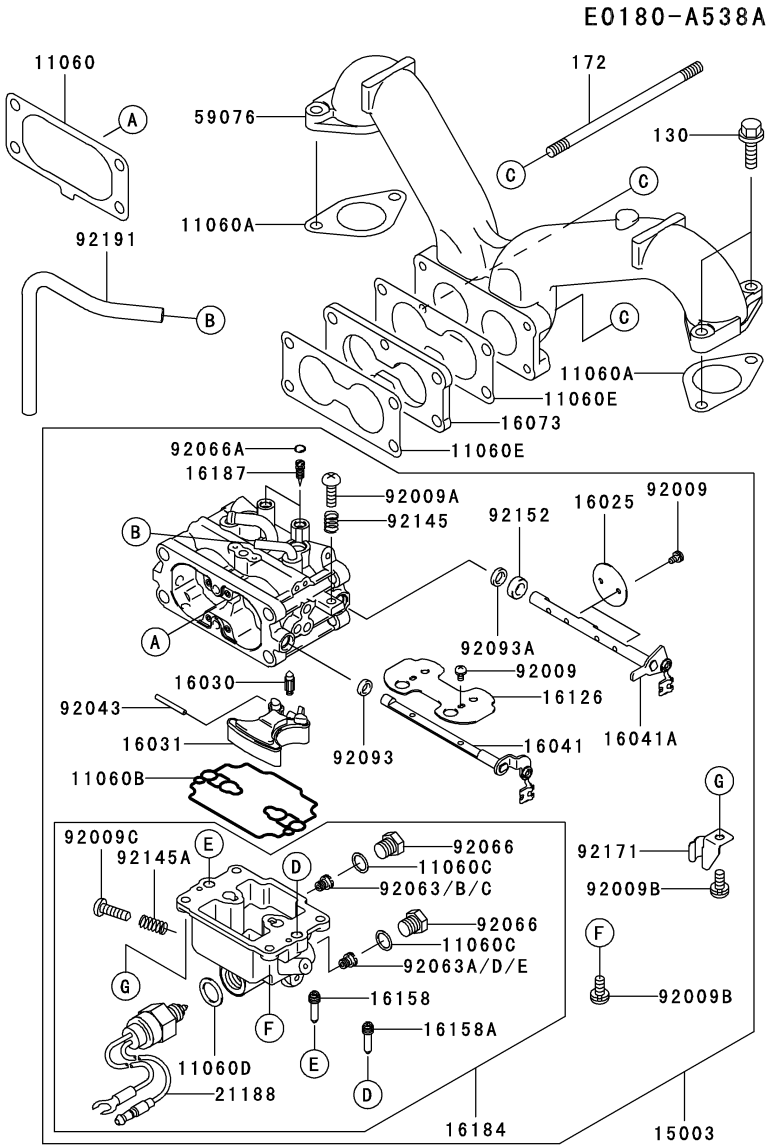

Ref. No.	Part No.	Description	Quantity A
11060	11060-7009	GASKET,AIR FILTER	1
11060A	11060-7011	GASKET,MANIFOLD	2
11060B	11060-7018	GASKET,FLOAT CHAMBER	1
11060C	11060-7019	GASKET,MAIN PLUG	2
11060D	11060-7020	GASKET,SOLENOID	1
11060E	11060-7024	GASKET,CARBURETOR	2
15003	15003-7080	CARBURETOR-ASSY	1
16025	16025-7003	VALVE-THROTTLE	2
16030	16030-7002	VALVE-FLOAT	1
16031	16031-7001	FLOAT	1
16041	16041-7007	SHAFT-CARBURETOR,CHOKE	1
16041A	16041-7014	SHAFT-CARBURETOR	1
16073	16073-7005	INSULATOR	1
16126	16126-7002	VALVE,CHOKE	1
16158	16158-7006	JET-SLOW,#46	1
16158A	16158-7007	JET-SLOW,#44	1
16184	16184-7006	CHAMBER-ASSY-FLOAT	1
16187	16187-7002	NEEDLE-JET	2
21188	21188-7001	SOLENOID	1
59076	59076-7002	MANIFOLD-INTAKE	1
92009	92009-7003	SCREW	6
92009A	92009-7004	SCREW	1
92009B	92009-7005	SCREW	4
92009C	92009-7006	SCREW,DRAIN	1
92043	92043-7004	PIN,FLOAT	1
92063	92063-7010	JET-MAIN,#136	1
92063A	92063-7011	JET-MAIN,#140	1
92063B	92063-7017	JET-MAIN,#133	1
92063C	92063-7018	JET-MAIN,#130	1
92063D	92063-7019	JET-MAIN,#139	1
92063E	92063-7020	JET-MAIN,#134	1
92066	92066-7008	PLUG,MAIN JET	2
92066A	92066-7009	PLUG,EXPANSION	2
92093	92093-7001	SEAL,D=5.9	1
92093A	92093-7002	SEAL,D=6.9	1
92145	92145-7010	SPRING	1
92145A	92145-7011	SPRING	1
92152	92152-7001	COLLAR	1
92171	92171-7001	CLAMP	1
92191	92191-7023	TUBE,4.76X7.94X215	1
130	130B0620	BOLT-FLANGED	4
172	172G06105	BOLT-STUD	2

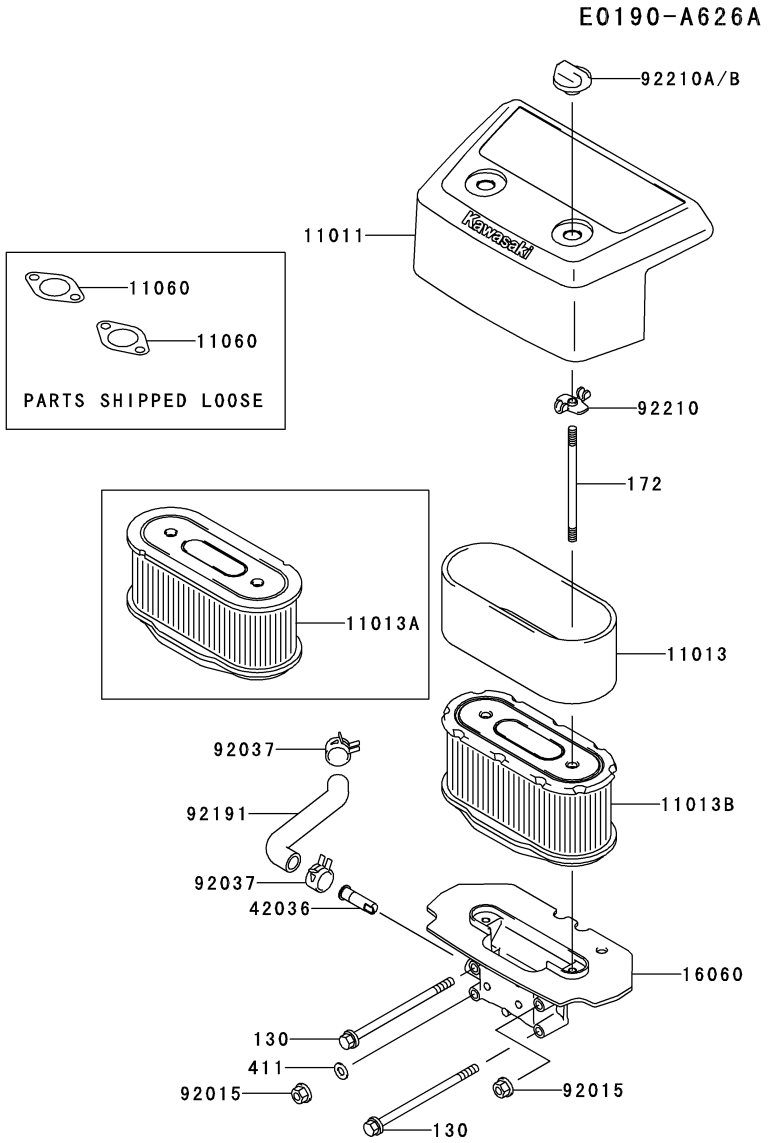

Ref. No.	Part No.	Description	Quantity A
11011	11011-7003	CASE-AIR FILTER	1
11013	11013-7009	ELEMENT-AIR FILTER	1
11013A	11013-7010	ELEMENT-AIR FILTER	*
11013B	11013-7024	ELEMENT-AIR FILTER	1
11060	11060-7016	GASKET,MUFFLER	2
16060	16060-7001	PIPE-INTAKE	1
42036	42036-7002	SLEEVE	1
92015	92015-1193	NUT	2
92037	92037-2079	CLAMP	2
92191	92191-7006	TUBE	1
92210	92210-7004	NUT	2
92210A	92210-7008	NUT	*
92210B	92210-7015	NUT	2
130	130B06105	BOLT-FLANGED	2
172	172G0690	BOLT-STUD	2
411	411B0600	WASHER-PLAIN	1

E0200-A278A

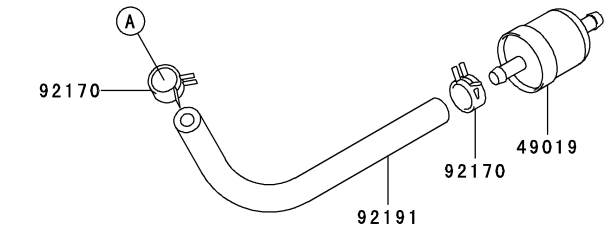

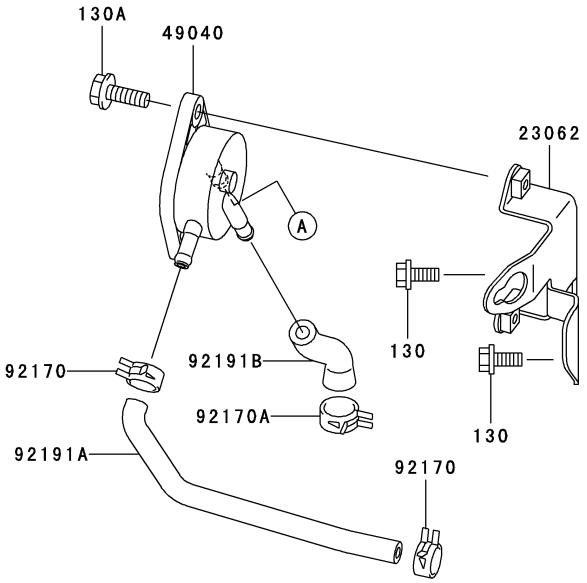

Ref. No.	Part No.	Description	Quantity A
23062	23062-7004-9H	BRACKET-COMP	1
49019	49019-7001	FILTER-FUEL	1
49040	49040-7001	PUMP-FUEL	1
92170	92170-2088	CLAMP	4
92170A	92170-7003	CLAMP	1
92191	92191-7003	TUBE,6.35X12.7X160	1
92191A	92191-7017	TUBE	1
92191B	92191-7027	TUBE	1
130	130B0616	BOLT-FLANGED	2
130A	130B0620	BOLT-FLANGED	2

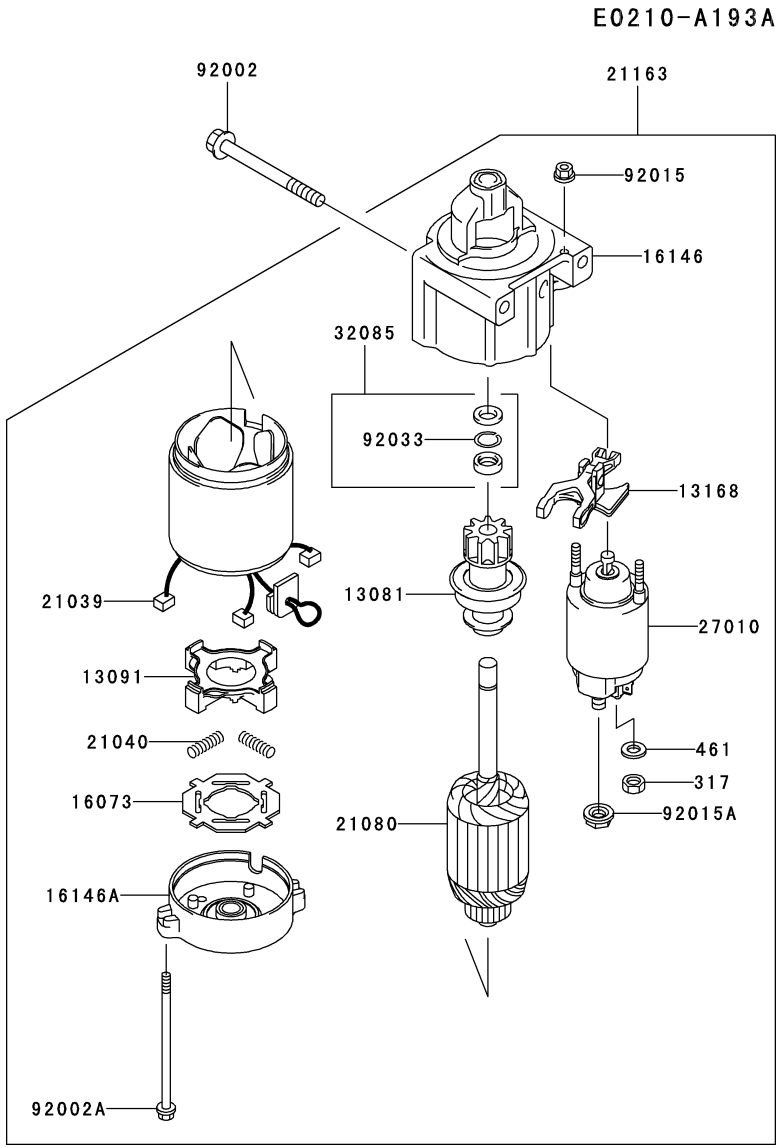

Ref. No.	Part No.	Description	Quantity A
13081	13081-2227	CLUTCH-ASSY	1
13091	13091-2068	HOLDER,BRUSH	1
13168	13168-2148	LEVER,SHIFT	1
16073	16073-2098	INSULATOR	1
16146	16146-2215	COVER-ASSY	1
16146A	16146-2216	COVER-ASSY	1
21039	21039-2059	BRUSH	4
21040	21040-2052	SPRING-BRUSH	4
21080	21080-2058	ARMATURE	1
21163	21163-7002	STARTER-ELECTRIC	1
27010	27010-2122	SWITCH	1
32085	32085-2097	STOPPER	1
92002	92002-1794	BOLT,8X83	2
92002A	92002-2277	BOLT	2
92015	92015-2146	NUT	2
92015A	92015-2147	NUT	1
92033	92033-2081	RING-SNAP	1
317	317B0800	NUT-HEX-SMALL	1
461	461F0800	WASHER-SPRING	1

PART NAME INDEX

AIR-FILTER/MUFFLER B-11
CARBURETOR B-10
CONTROL-EQUIPMENT B-09
COOLING-EQUIPMENT B-07
CYLINDER/CRANKCASE B-03
ELECTRIC-EQUIPMENT B-08
FUEL-TANK/FUEL-VALVE C-03
LUBRICATION-EQUIPMENT B-06
PISTON/CRANKSHAFT B-04
STARTER C-04
VALVE/CAMSHAFT B-05

This catalog covers:

FH721V- □ S18

GRID NO. **H-10**

This grid covers:

NUMERICAL PARTS INDEX

Part No.	Grid No.	Part No.	Grid No.	Part No.	Grid No.	Part No.	Grid No.	Part No.	Grid No.
11004-7006	B-03	14075-7008	B-06	49019-7001	C-03	92063-7019	B-10		
11008-7012	B-03	14091-7004	B-03	49040-7001	C-03	92063-7020	B-10		
11008-7013	B-03	15003-7080	B-10	49065-2078	B-06	92066-7002	B-08		
11011-7003	B-11	16025-7003	B-10	49065-7003	B-06	92066-7003	B-06		
11013-7009	B-11	16030-7002	B-10	49078-7002	B-05	92066-7008	B-10		
11013-7010	B-11	16031-7001	B-10	49089-7004	B-07	92066-7009	B-10		
11013-7024	B-11	16041-7007	B-10	49089-7005	B-07	92070-7004	B-08		
11022-7002	B-03	16041-7014	B-10	49089-7030	B-07	92072-7003	B-08		
11051-7008	B-09	16060-7001	B-11	49089-7037	B-07	92093-7001	B-10		
11060-7009	B-10	16073-2098	C-04	49089-7040	B-07	92093-7002	B-10		
11060-7011	B-10	16073-7005	B-10	49103-7004	B-09	92140-7002	B-05		
11060-7012	B-03	16126-7001	B-03	49109-7003	B-03	92140-7003	B-06		
11060-7013	B-03	16126-7002	B-10	49113-7017	B-09	92145-7001	B-05		
11060-7014	B-03	16146-2215	C-04	49118-7007	B-05	92145-7002	B-06		
11060-7016	B-11	16146-2216	C-04	49120-7018	B-03	92145-7004	B-09		
11060-7018	B-10	16154-2053	B-06	510A5100	B-08	92145-7005	B-09		
11060-7019	B-10	16154-2054	B-06	55020-7007	B-07	92145-7009	B-09		
11060-7020	B-10	16158-7006	B-10	59031-7001	B-08	92145-7010	B-10		
11060-7024	B-10	16158-7007	B-10	59041-7003	B-07	92145-7011	B-10		
12004-7002	B-05	16169-7006	B-09	59051-7011	B-06	92150-2182	B-09		
12005-7004	B-05	16171-7004	B-09	59066-7004	B-07	92151-2097	B-08		
12009-7001	B-05	16184-7006	B-10	59071-7009	B-06	92151-7014	B-09		
12011-2056	B-05	16187-7002	B-10	59076-7002	B-10	92151-7017	B-04		
12016-7006	B-05	172G06105	B-10	59231-7006	B-06	92151-7019	B-05		
12032-7001	B-05	172G0690	B-11	670D2016	B-06	92152-7001	B-10		
13001-7007	B-04	172G0818	B-03	92002-1794	C-04	92153-7005	B-09		
13002-7001	B-04	21039-2059	C-04	92002-2277	C-04	92153-7007	B-07		
13008-6058	B-04	21040-2052	C-04	92004-7006	B-07	92153-7008	B-07		
13025-7002	B-04	21066-7011	B-08	92004-7009	B-08	92153-7019	B-05		
13029-7003	B-04	21080-2058	C-04	92009-2308	B-08	92170-2088	C-03		
13031-7023	B-04	21163-7002	C-04	92009-2341	B-05	92170-7001	B-09		
13070-7004	B-05	21171-7007	B-08	92009-7003	B-10	92170-7003	C-03		
13070-7007	B-05	21171-7013	B-08	92009-7004	B-10	92171-7001	B-10		
13081-2227	C-04	21188-7001	B-10	92009-7005	B-10	92171-7005	B-07		
13091-2068	C-04	21193-7020	B-08	92009-7006	B-10	92191-7003	C-03		
130B06105	B-11	214B0408	B-03	92015-1193	B-11	92191-7006	B-11		
130B0612	B-03	214B0408	B-09	92015-2146	C-04	92191-7017	C-03		
130B0612	B-06	214B0412	B-09	92015-2147	C-04	92191-7023	B-10		
130B0612	B-07	214B0510	B-09	92015-2253	B-05	92191-7027	C-03		
130B0612	B-09	224B0520	B-08	92026-7007	B-07	92200-7001	B-05		
130B0616	C-03	23062-7004-9H	C-03	92033-2081	C-04	92200-7002	B-08		
130B0620	B-08	23062-7005	B-07	92033-7001	B-05	92210-0003	B-07		
130B0620	B-10	26011-7008	B-08	92033-7004	B-03	92210-7004	B-11		
130B0620	C-03	26030-7002	B-08	92033-7005	B-04	92210-7008	B-11		
130B0640	B-03	27010-2122	C-04	92037-2079	B-11	92210-7015	B-11		
130B0816	B-07	311B0600	B-07	92043-7001	B-03				
130T0850	B-03	311B0600	B-08	92043-7003	B-06				
130T0875	B-03	311B0600	B-09	92043-7004	B-10				
13107-7009	B-06	317B0800	C-04	92049-7001	B-03				
13107-7013	B-09	32085-2097	C-04	92049-7002	B-03				
13116-7002	B-05	39067-7002	B-06	92049-7004	B-03				
13168-2148	C-04	39129-7004	B-09	92049-7005	B-03				
13251-7005	B-04	411B0600	B-09	92049-7009	B-03				
13270-7007	B-07	411B0600	B-11	92049-7010	B-03				
13271-7005	B-06	42036-7001	B-05	92049-7011	B-03				
13271-7006	B-03	42036-7002	B-11	92055-7006	B-06				
13271-7007	B-05	42036-7009	B-05	92063-7010	B-10				
13271-7018	B-09	461F0800	C-04	92063-7011	B-10				
13271-7021	B-05	49015-6225	B-03	92063-7017	B-10				
14037-7008-9H	B-07	49015-6255	B-03	92063-7018	B-10				