B-03 CYLINDER/CRANKCASE

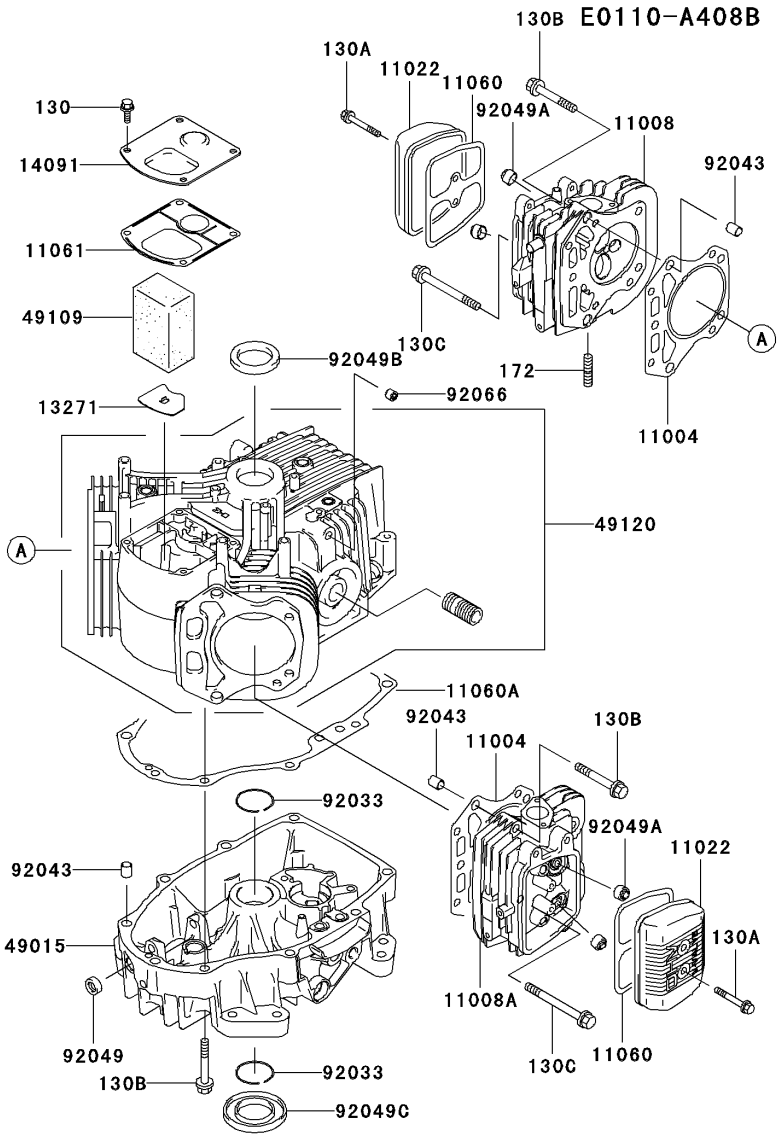

Ref No.	Part No.	Part Name	Qty A
130	130B0612	BOLT-FLANGED	4
130A	130B0640	BOLT-FLANGED	4
130B	130T0850	BOLT-FLANGED	17
130C	130T0875	BOLT-FLANGED	2
172	172G0818	BOLT-STUD	4
11004	11004-7010	GASKET-HEAD	2
11008	11008-6042	HEAD-COMP-CYLINDER	1
11008A	11008-7009	HEAD-COMP-CYLINDER	1
11022	11022-7003	CASE-ROCKER	2
11060	11060-7001	GASKET,ROCKER CASE	2
11060A	11060-7008	GASKET,CRANKCASE COVER	1
11061	11061-7001	GASKET,BREATHER	1
13271	13271-7016	PLATE	1
14091	14091-7006	COVER	1
49015	49015-6226	COVER-CRANKCASE	1
49109	49109-7002	ELEMENT-BREATHER	1
49120	49120-7023	CRANKCASE-COMP	1
92033	92033-7003	RING-SNAP	2
92043	92043-7001	PIN	6
92049	92049-7005	SEAL-OIL,SO 8X14X5 HS	1
92049A	92049-7009	SEAL-OIL,6X11X10.4	4
92049B	92049-7010	SEAL-OIL,SD 35X48X8 R HS	1
92049C	92049-7011	SEAL-OIL,SD 35X62X8 L HS	1
92066	92066-7002	PLUG	1

C-03 FUEL-TANK/FUEL-VALVE

E0200-A394A

Ref No.	Part No.	Part Name	Qty A
130	130B0620	BOLT-FLANGED	2
11065	11065-7005	CAP	1
23062	23062-7004-9H	BRACKET-COMP	1
49040	49040-7001	PUMP-FUEL	1
92170	92170-2088	CLAMP	2
92191	92191-7002	TUBE	1
92191A	92191-7004	TUBE	1

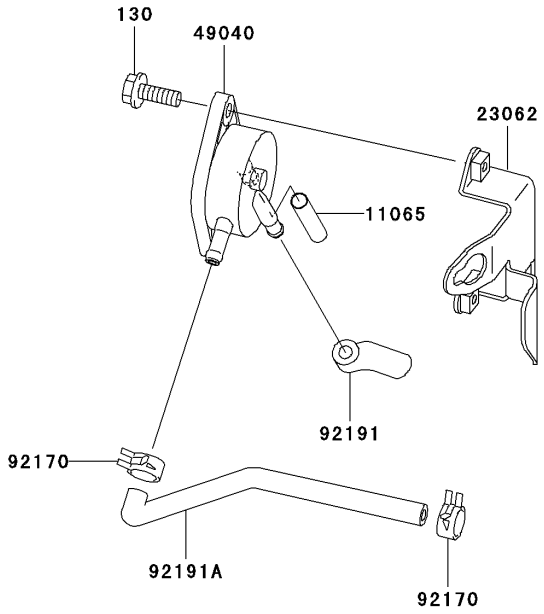

B-11 AIR-FILTER/MUFFLER

E0190-A603A

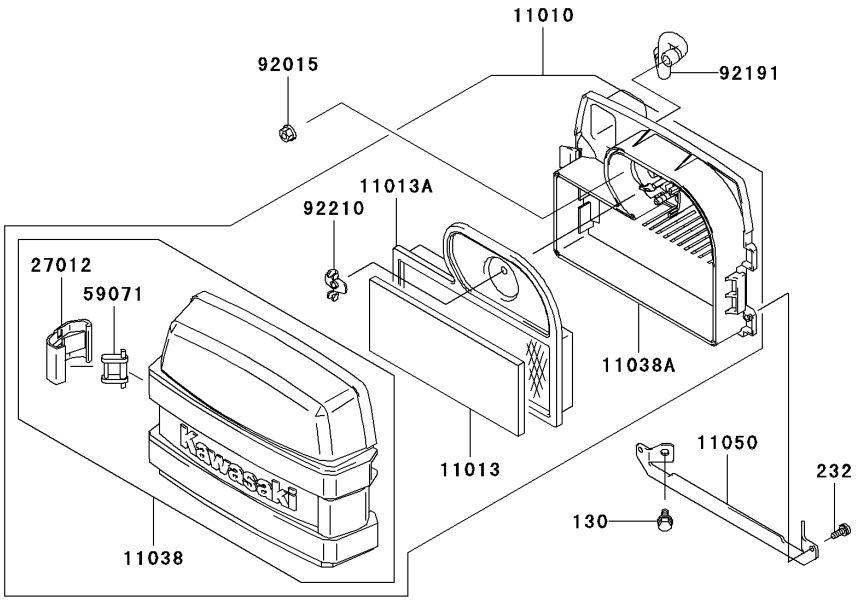

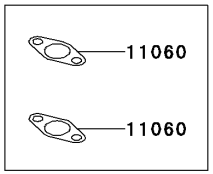

Ref No.	Part No.	Part Name	Qty A
130	130B0612	BOLT-FLANGED	2
232	232B0514	SCREW-PAN-WS+-	2
11010	11010-7007	FILTER-ASSY-AIR	1
11013	11013-7001	ELEMENT-AIR FILTER	1
11013A	11013-7002	ELEMENT-AIR FILTER	1
11038	11038-7001	CASE-ASSY-AIR FILTER	1
11038A	11038-7006	CASE-ASSY-AIR FILTER	1
11050	11050-7006	BRACKET	1
11060	11060-7021	GASKET,MUFFLER	2
27012	27012-7001	HOOK,AIR FILTER	2
59071	59071-7001	JOINT	2
92015	92015-1193	NUT	2
92191	92191-7001	TUBE	1
92210	92210-7004	NUT	1

B-10 CARBURETOR

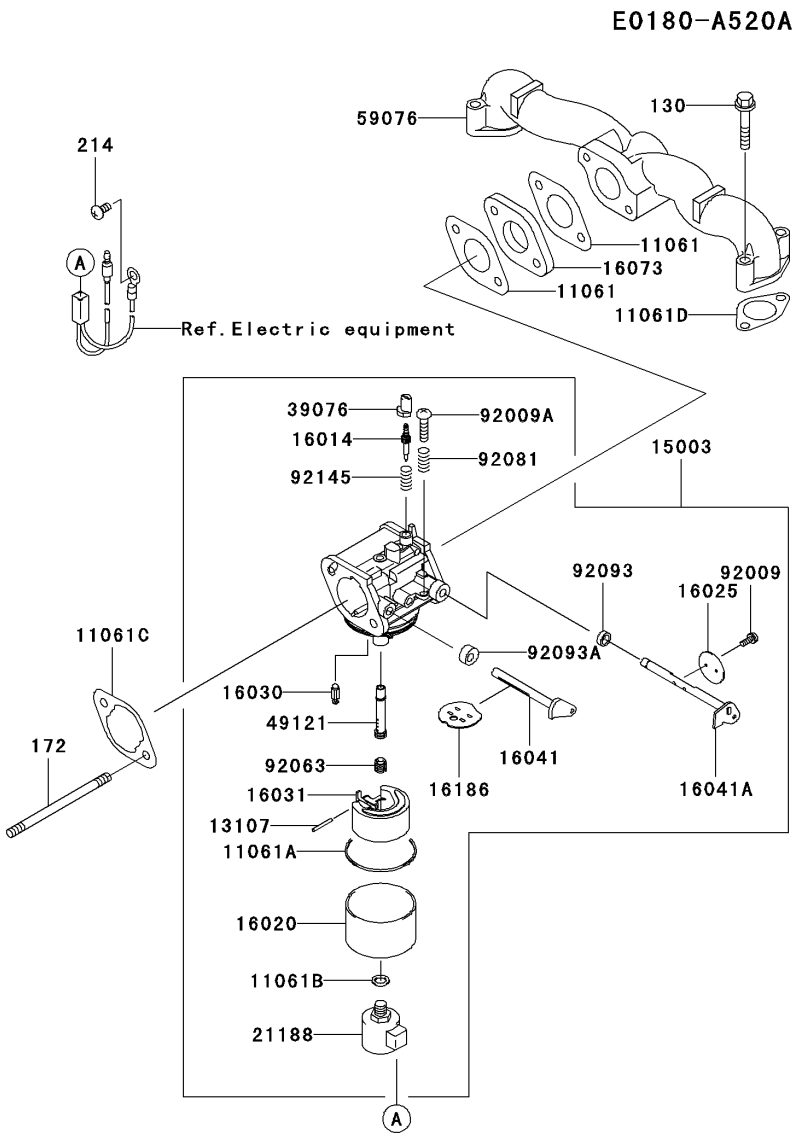

Ref No.	Part No.	Part Name	Qty A
130	130B0635	BOLT-FLANGED	4
172	172G0685	BOLT-STUD	2
214	214B0510	SCREW-PAN+-	1
11061	11061-7004	GASKET,INSULATOR	2
11061A	11061-7009	GASKET,CHAMBER	1
11061B	11061-7010	GASKET	1
11061C	11061-7018	GASKET,AIR CLEANER	1
11061D	11061-7019	GASKET	2
13107	13107-7018	SHAFT	1
15003	15003-7081	CARBURETOR-ASSY	1
16014	16014-7004	SCREW-PILOT AIR	1
16020	16020-7003	CHAMBER-FLOAT	1
16025	16025-7006	VALVE-THROTTLE	1
16030	16030-7003	VALVE-FLOAT	1
16031	16031-7002	FLOAT	1
16041	16041-7016	SHAFT-CARBURETOR,CHOKE	1
16041A	16041-7018	SHAFT-CARBURETOR,THROTTLE	1
16073	16073-7007	INSULATOR	1
16186	16186-7004	VALVE-ASSY-CHOKE	1
21188	21188-7002	SOLENOID	1
39076	39076-7001	LIMITER	1
49121	49121-7004	NOZZLE-MAIN	1
59076	59076-7001	MANIFOLD-INTAKE	1
92009	92009-2083	SCREW	2
92009A	92009-2349	SCREW	1
92063	92063-7037	JET-MAIN,#105	1
92081	92081-2234	SPRING	1
92093	92093-2100	SEAL	1
92093A	92093-7003	SEAL	1
92145	92145-7015	SPRING	1

B-09

CONTROL-EQUIPMENT

E0170-A433A

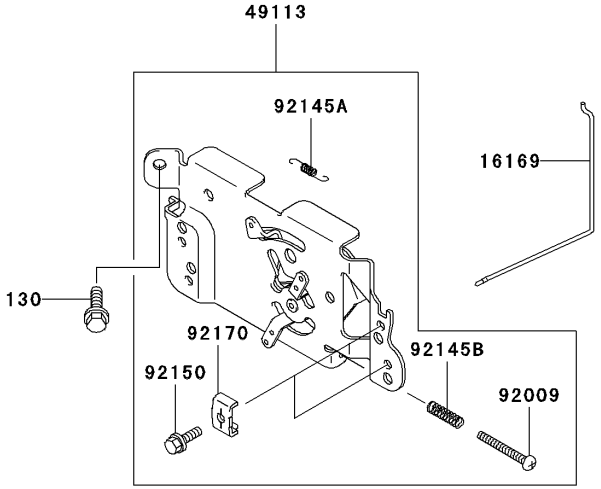

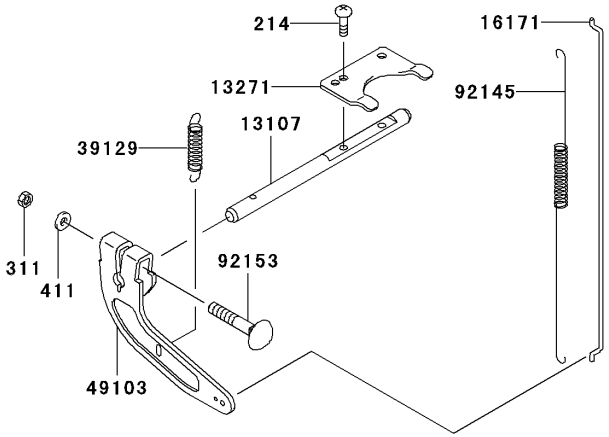

Ref No.	Part No.	Part Name	Qty A
130	130B0612	BOLT-FLANGED	2
214	214B0408	SCREW-PAN+-	2
311	311B0600	NUT-HEX	1
411	411B0600	WASHER-PLAIN	1
13107	13107-7010	SHAFT	1
13271	13271-7018	PLATE	1
16169	16169-7010	LINK-CHOKE	1
16171	16171-7001	LINK	1
39129	39129-7003	SPRING-GOVERNOR	1
49103	49103-7004	ARM-GOVERNOR	1
49113	49113-7009	PANEL-COMP-CONTROL	1
92009	92009-7007	SCREW,4X35	1
92145	92145-7003	SPRING	1
92145A	92145-7004	SPRING	1
92145B	92145-7005	SPRING	1
92150	92150-2182	BOLT,5X18	2
92153	92153-7005	BOLT,6X35	1
92170	92170-7001	CLAMP	2

B-08 ELECTRIC-EQUIPMENT

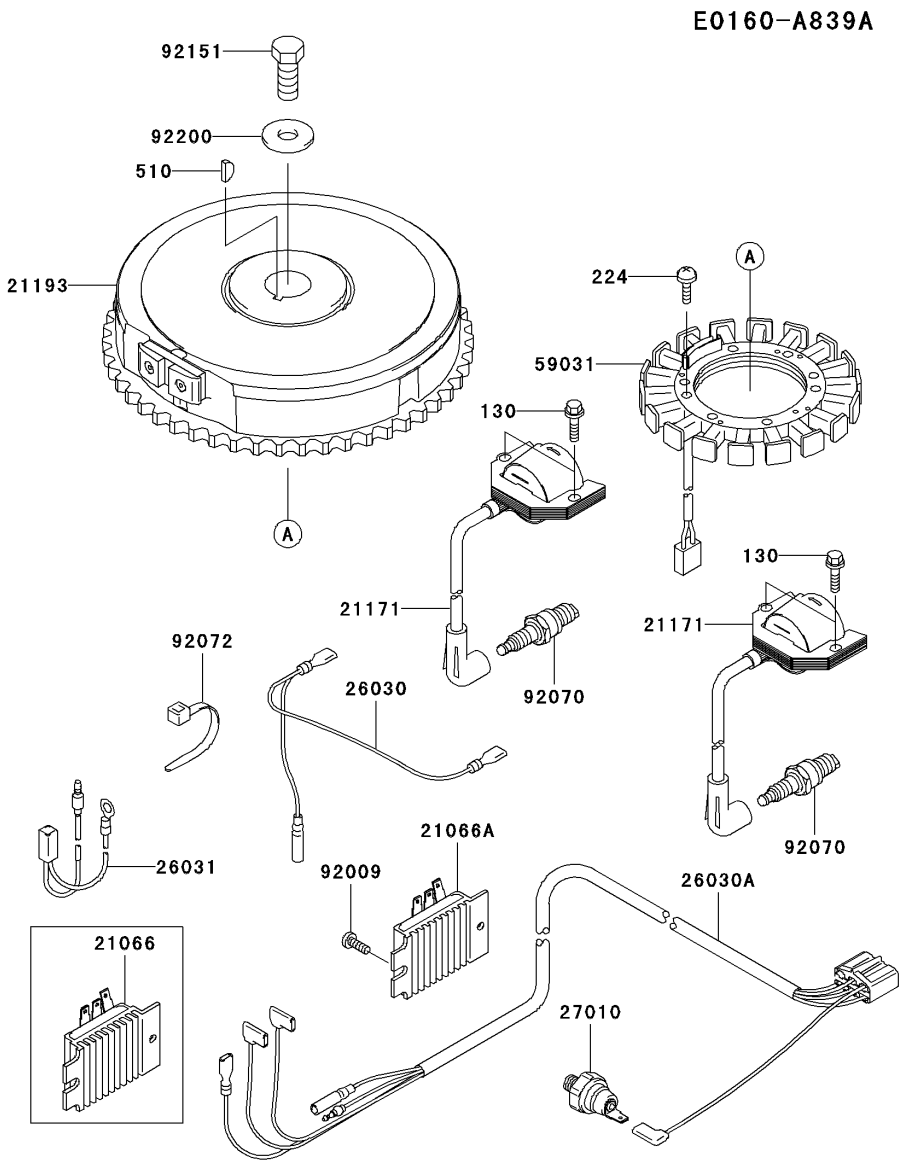

Ref No.	Part No.	Part Name	Qty A
130	130B0620	BOLT-FLANGED	4
224	224B0520	SCREW-PAN-WP-CROS	4
510	510A5100	KEY-WOODRUFF	1
21066	21066-7008	REGULATOR-VOLTAGE	*
21066A	21066-7012	REGULATOR-VOLTAGE	1
21171	21171-7007	COIL-ASSY-IGNITION	2
21193	21193-7008	FLYWHEEL-ASSY	1
26030	26030-7001	HARNESS	1
26030A	26030-7003	HARNESS	1
26031	26031-7002	HARNESS	1
27010	27010-7002	SWITCH	1
59031	59031-7001	COIL-CHARGING	1
92009	92009-2308	SCREW	1
92070	92070-7003	PLUG-SPARK,RCJ8Y,SOLID	2
92072	92072-7003	BAND	3
92151	92151-2097	BOLT,12X30	1
92200	92200-7002	WASHER	1

B-07 COOLING-EQUIPMENT

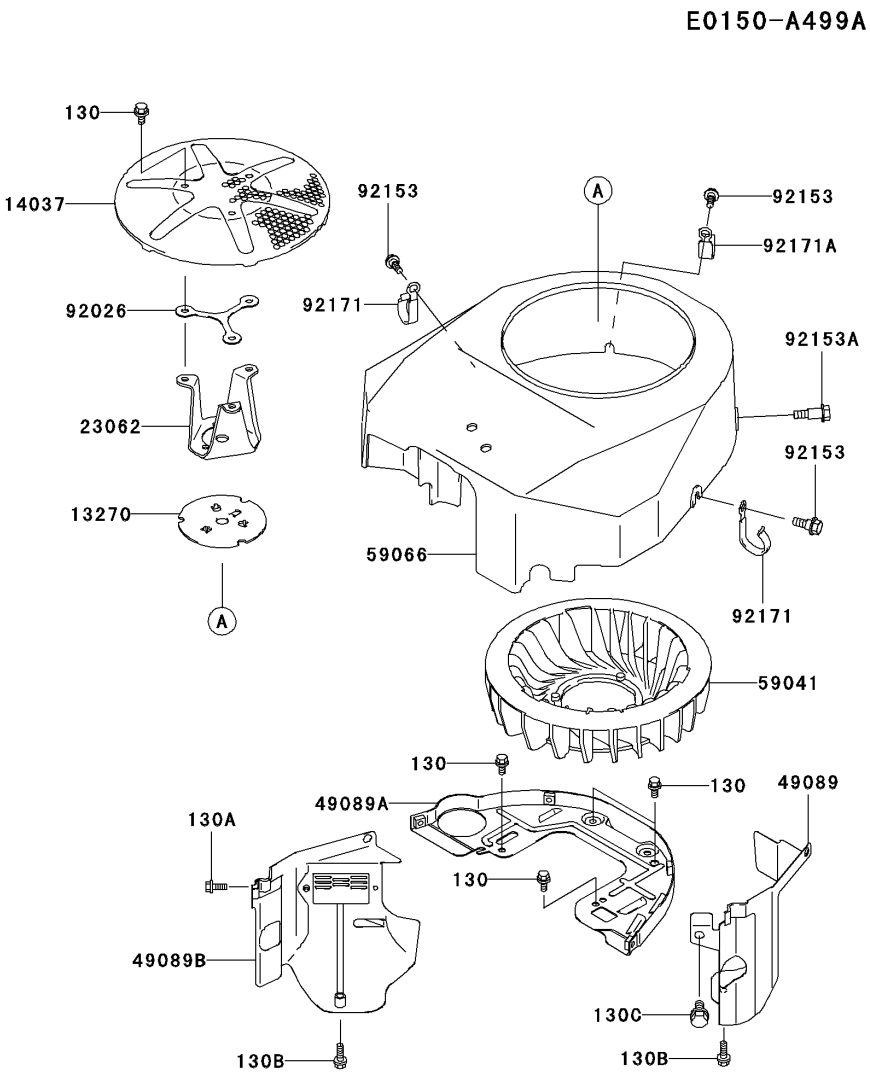

Ref No.	Part No.	Part Name	Qty A
130	130B0612	BOLT-FLANGED	7
130A	130B0616	BOLT-FLANGED	2
130B	130B0625	BOLT-FLANGED	2
130C	130B0816	BOLT-FLANGED	1
13270	13270-7007	PLATE	1
14037	14037-7010	SCREEN	1
23062	23062-7010	BRACKET-COMP	1
49089	49089-7002	SHROUD-ENGINE	1
49089A	49089-7033	SHROUD-ENGINE	1
49089B	49089-7034	SHROUD-ENGINE	1
59041	59041-7001	FAN	1
59066	59066-7011	HOUSING-FAN	1
92026	92026-7007	SPACER	AR
92153	92153-7007	BOLT	3
92153A	92153-7008	BOLT	1
92171	92171-7005	CLAMP	2
92171A	92171-7008	CLAMP	1

B-06 LUBRICATION-EQUIPMENT

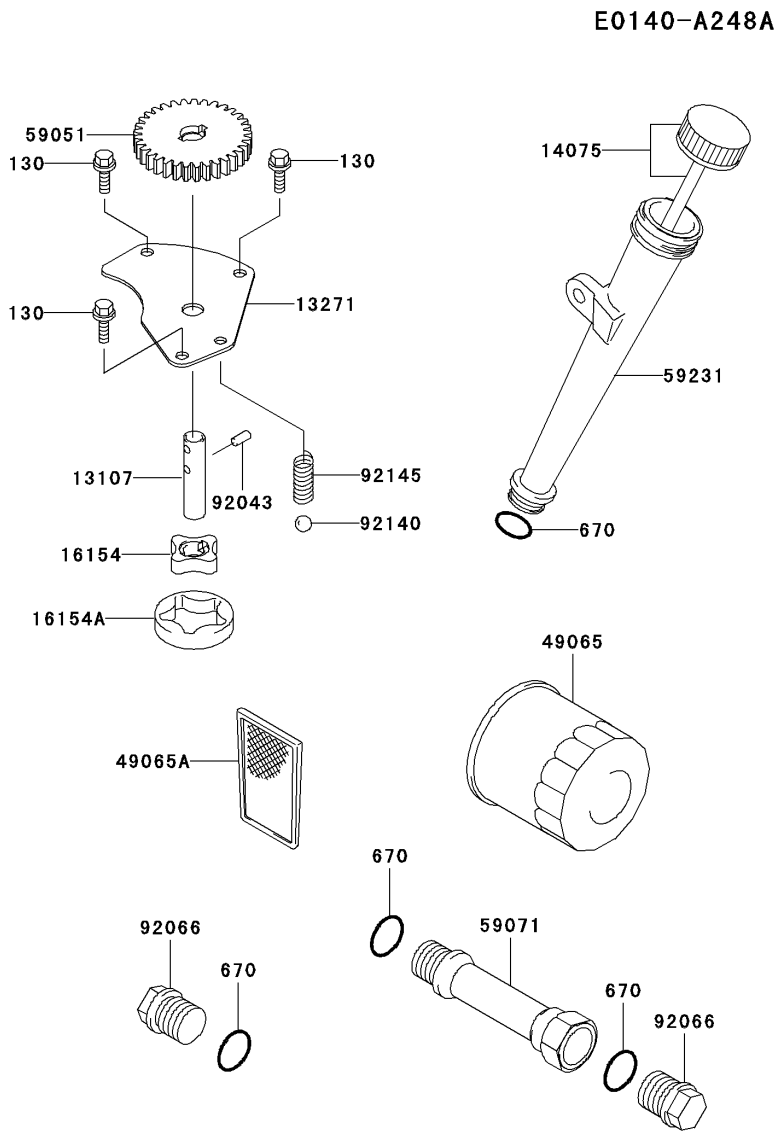

Ref No.	Part No.	Part Name	Qty A
130	130B0612	BOLT-FLANGED	3
670	670D2016	O RING,16MM	4
13107	13107-7009	SHAFT	1
13271	13271-7017	PLATE	1
14075	14075-7009	CAP-ASSY	1
16154	16154-2053	ROTOR-PUMP,IN	1
16154A	16154-2054	ROTOR-PUMP,OUT	1
49065	49065-2080	FILTER-OIL	1
49065A	49065-7004	FILTER-OIL	1
59051	59051-7011	GEAR-SPUR	1
59071	59071-7007	JOINT	1
59231	59231-7005	FILLER	1
92043	92043-7003	PIN	2
92066	92066-7003	PLUG	2
92140	92140-7003	BALL	1
92145	92145-7002	SPRING	1

B-05 VALVE/CAMSHAFT

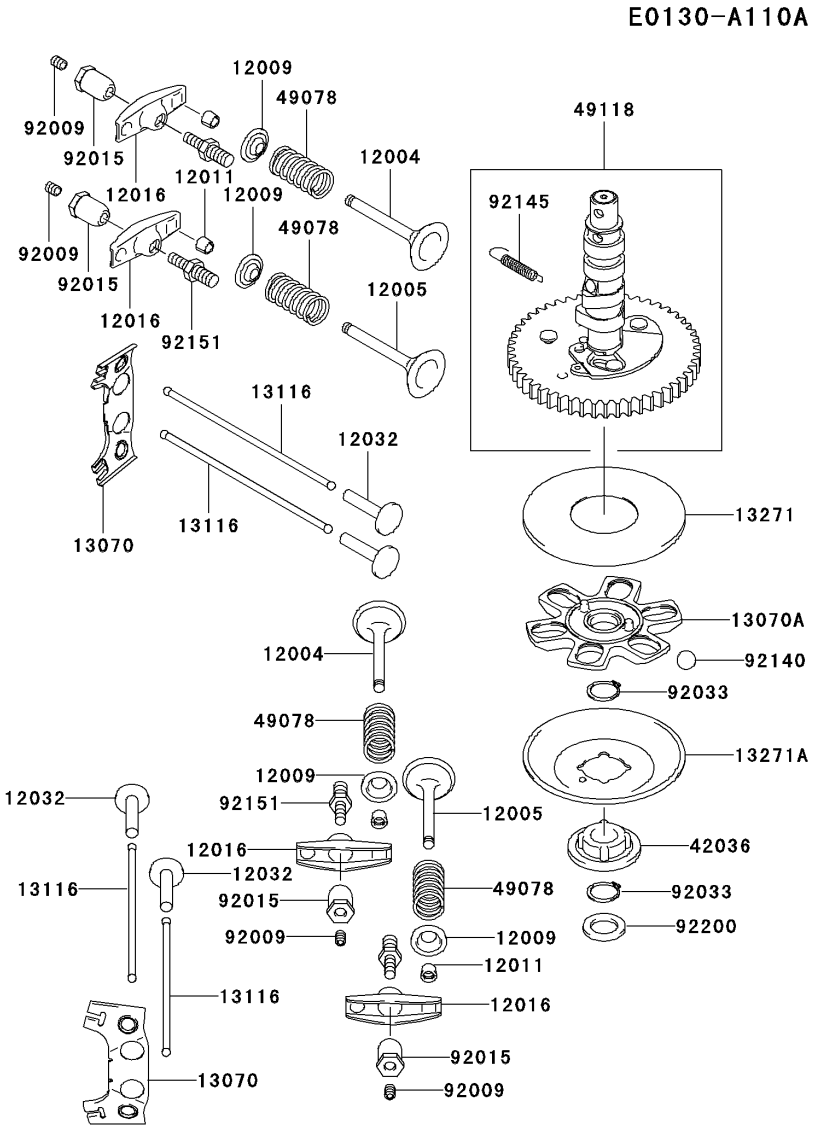

Ref No.	Part No.	Part Name	Qty A
12004	12004-7003	VALVE-INTAKE	2
12005	12005-7003	VALVE-EXHAUST	2
12009	12009-7001	RETAINER-VALVE SPRING	4
12011	12011-2056	COLLET	8
12016	12016-7001	ARM-ROCKER	4
12032	12032-7001	TAPPET	4
13070	13070-7001	GUIDE	2
13070A	13070-7004	GUIDE	1
13116	13116-2057	ROD-PUSH	4
13271	13271-7007	PLATE	1
13271A	13271-7021	PLATE,GOVERNOR	1
42036	42036-7001	SLEEVE	1
49078	49078-7001	SPRING-ENGINE VALVE	4
49118	49118-7004	CAMSHAFT-COMP	1
92009	92009-2341	SCREW	4
92015	92015-2253	NUT	4
92033	92033-7001	RING-SNAP	2
92140	92140-7002	BALL	6
92145	92145-7001	SPRING	1
92151	92151-7019	BOLT	4
92200	92200-7001	WASHER	1

B-04 PISTON/CRANKSHAFT

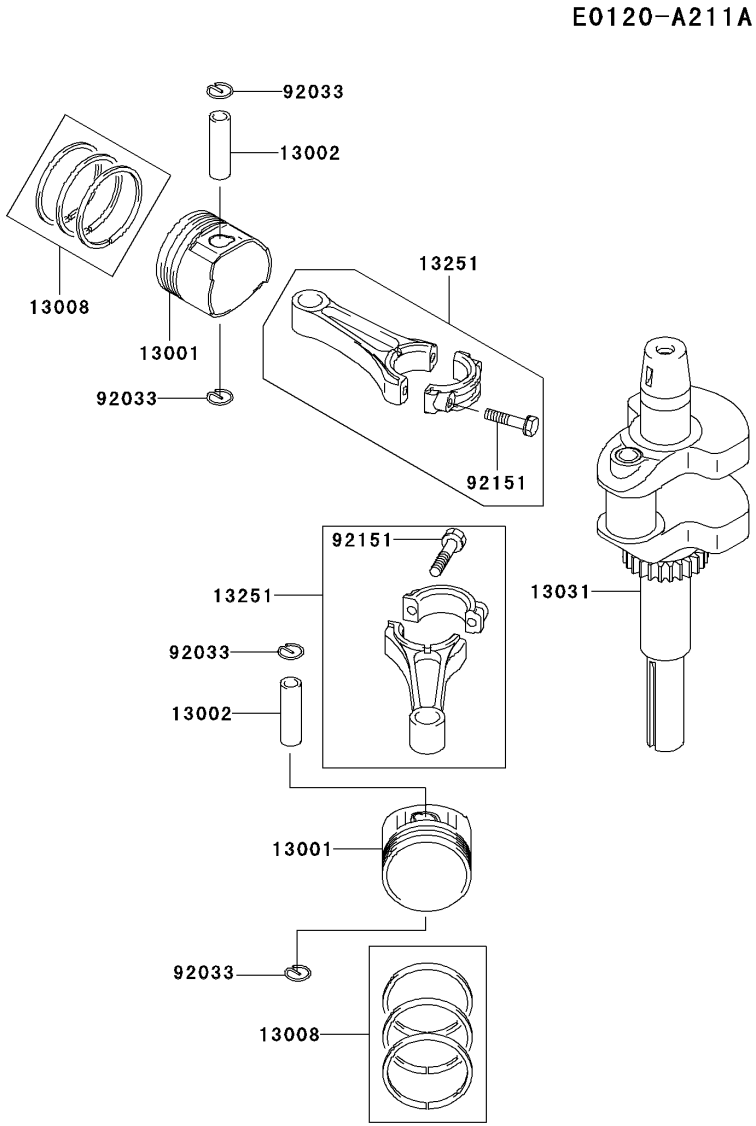

Ref No.	Part No.	Part Name	Qty A
13001	13001-7010	PISTON-ENGINE	2
13002	13002-7001	PIN-PISTON	2
13008	13008-6060	RING-SET-PISTON	2
13031	13031-7036	CRANKSHAFT-COMP	1
13251	13251-7010	ROD-ASSY-CONNECTING	2
92033	92033-7005	RING-SNAP	4
92151	92151-7017	BOLT,6X35	4

C-04 STARTER

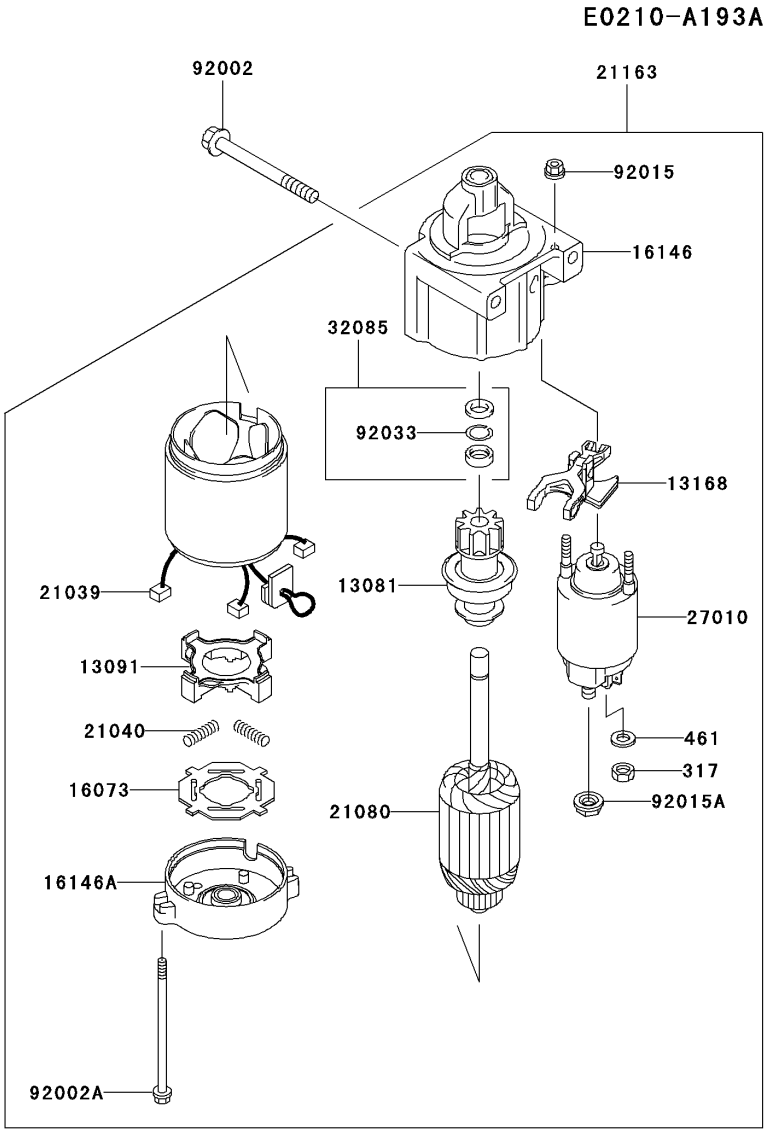

Ref No.	Part No.	Part Name	Qty A
317	317B0800	NUT-HEX-SMALL	1
461	461F0800	WASHER-SPRING	1
13081	13081-2227	CLUTCH-ASSY	1
13091	13091-2068	HOLDER,BRUSH	1
13168	13168-2148	LEVER,SHIFT	1
16073	16073-2098	INSULATOR	1
16146	16146-2215	COVER-ASSY	1
16146A	16146-2216	COVER-ASSY	1
21039	21039-2059	BRUSH	4
21040	21040-2052	SPRING-BRUSH	4
21080	21080-2058	ARMATURE	1
21163	21163-7002	STARTER-ELECTRIC	1
27010	27010-2122	SWITCH	1
32085	32085-2097	STOPPER	1
92002	92002-1794	BOLT,8X83	2
92002A	92002-2277	BOLT	2
92015	92015-2146	NUT	2
92015A	92015-2147	NUT	1
92033	92033-2081	RING-SNAP	1