PARTS CATALOG

4-STROKE ENGINE

FH541V

PRODUCT CODE	NOTE
FH541V-AS21	ZTR

KAWASAKI HEAVY INDUSTRIES, LTD

P/N 99907-2380-01

PARTS CATALOG INTRODUCTION

This parts catalog lists parts and sub-assemblies provided as service parts.
When it becomes necessary to replace parts, always use KAWASAKI GENUINE PARTS which have passed strict inspection which guarantees quality and performance.

1. HOW TO ORDER PARTS

1) When ordering the parts, be sure to use the parts catalog corresponding to the product code. Check the product revision codes on the product and the catalog.
Product Code (example) : FA130D–AA00
Product Revision Code
2) Specify the part code (all digits) exactly as listed in this catalog on your parts order.
3) The parts not shown in the illustrations of this catalog are not sold separately; only the complete units or next higher assemblies illustrated are supplied as the service parts.

2. EXPLANATION OF PARTS CATALOG FORMAT

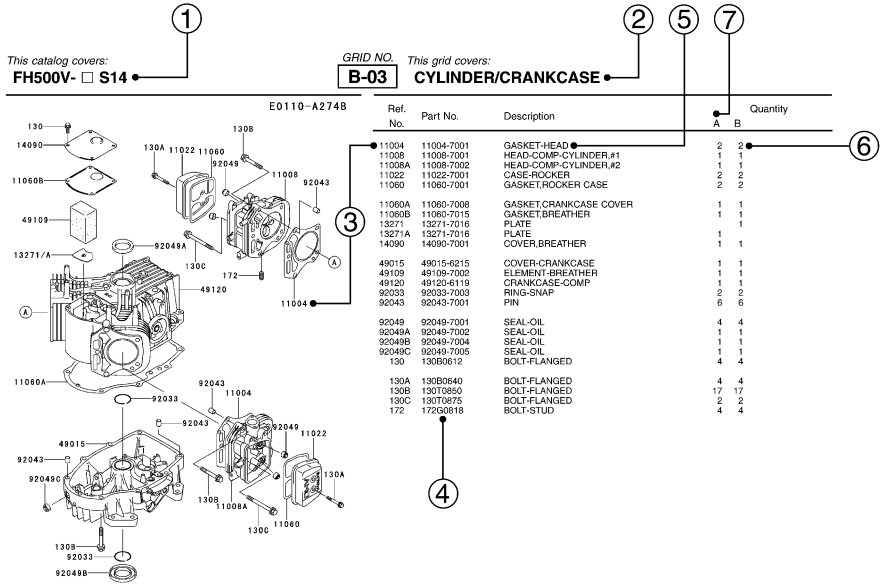

1) Product Code

This code describes the product code covered by this catalog. The product revision code, which is a part of the product code, is omitted.

2) Part Group Title

This title is the representative name for the group of parts illustrated on the page.

3) Reference Number

The reference numbers are shown on the illustration and the list as the link between them.

4) Part Number

This is the key of your parts ordering.
Three kinds of part number are used in this catalog.

a. Structure 1
□□□□□□—□□□□—□□
□□□□□□—□□□□□
Part Revision Code

b. Structure 2
□□□□□—□□□□—□□
Color Code for Painted Part

c. Standard Hardware Number
(for bolts, nuts, washer, or the like)
□□□□□□□□
Size Code
Material and Surface Treatment Code
Item Code

5) Description and Additional Information

The part name, the location, the size, and the serial number as additional information, etc. are described here. Use them to find out and check the part required.
When a part number is changed without change of the product revision code and the changed parts are not interchangeable, the serial number of the product is noted as follows;

(	– FA130 – 100001)	: Affected units are from beginning of the product of the product code up to and including this serial number.
(FA130 – 100002	–)	: Affected units are from this serial number and above.
(FA130 – 100002	– FA130 – 110001)	: Affected units are in this serial number range.

6) Quantity

The figure shows quantity of the part required at the indicated position on the illustration and for the specified product revision code.
The asterisk (*) on this column means the part can be used as the substitute on the product and is supplied until the stock is exhausted.
Note:Some small parts will be supplied by units.
Example: If six (6) bolts are ordered and the minimum quantity per unit is five (5), two (2), units of the bolt will be delivered.

7) Product Revision Code

This Code indicates an important change which affects the service parts interchangeability.

3. ABBREVIATIONS

#.....Number	FR.....Front	RH.....Right Hand
&.....And	G.....Gram	RPM....Revolutions Per Minute
(+).....Plus	HEX.....Hexagonal	RR.....Rear
(–).....Minus	ID=.....Inside Diameter	STD.....Standard
2ND.....Second	IN.....Inch	T.....Teeth
3RD.....Third	L=.....Length	T=.....Thickness
4TH.....Fourth	LH.....Left Hand	U/S.....Under Size
A.....Ampere	LWR.....Lower	UPP.....Upper
AR.....As Required	MM.....Millimeter	V.....Volt
ASSY.....Assembly	O/S.....Over Size	W.....Watt
CNT.....Center	OD=.....Outside Diameter	
COMP.....Complete	REF.....Reference	

This catalog covers:

FH541V- □ S21

GRID NO. **B-01** *This grid covers:* **PICTORIAL INDEX**

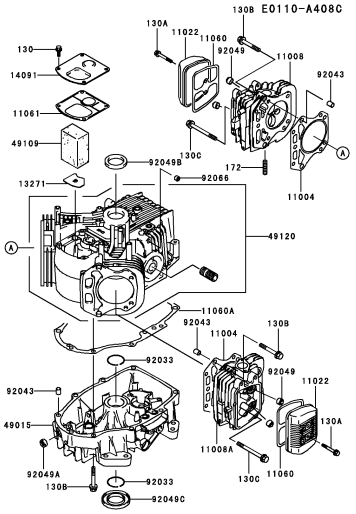

B-03 CYLINDER/CRANKCASE

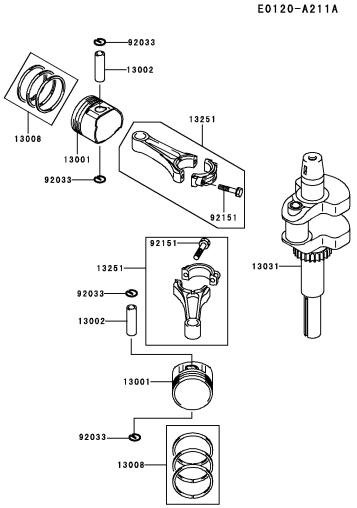

B-04 PISTON/CRANKSHAFT

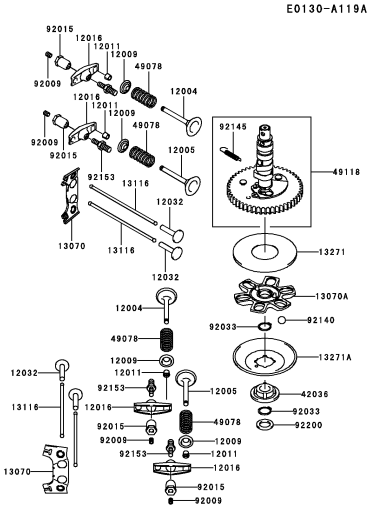

B-05 VALVE/CAMSHAFT

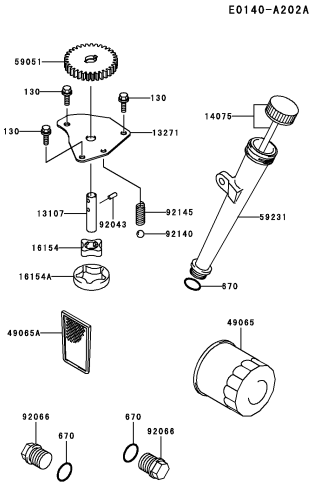

B-06 LUBRICATION-EQUIPMENT

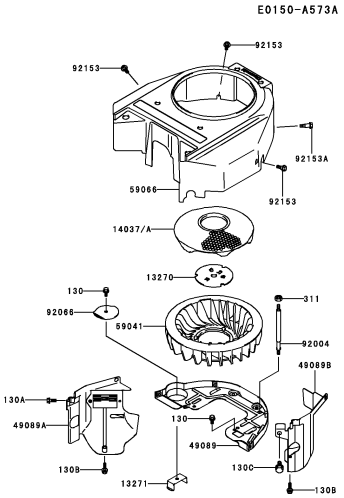

B-07 COOLING-EQUIPMENT

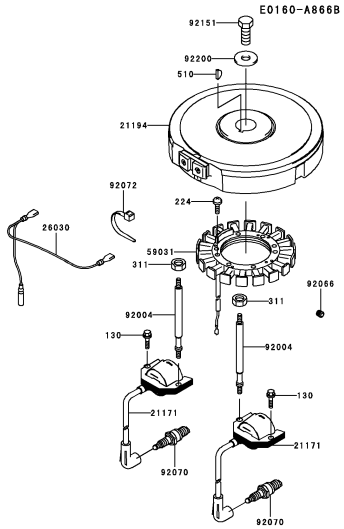

B-08 ELECTRIC-EQUIPMENT

This catalog covers:

FH541V- □ S21

GRID NO. **B-02**

This grid covers:

PICTORIAL INDEX

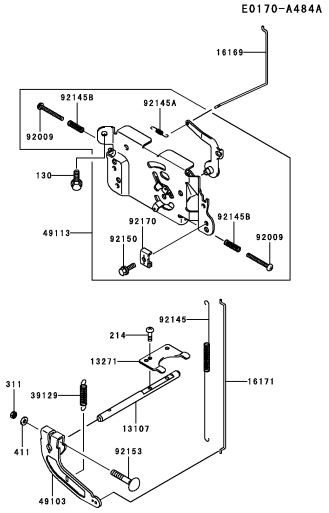

B-09 **CONTROL-EQUIPMENT**

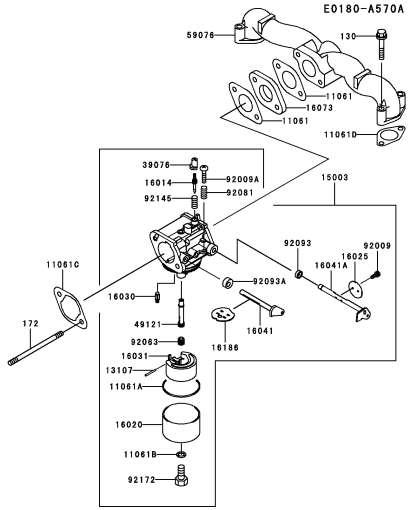

B-10 **CARBURETOR**

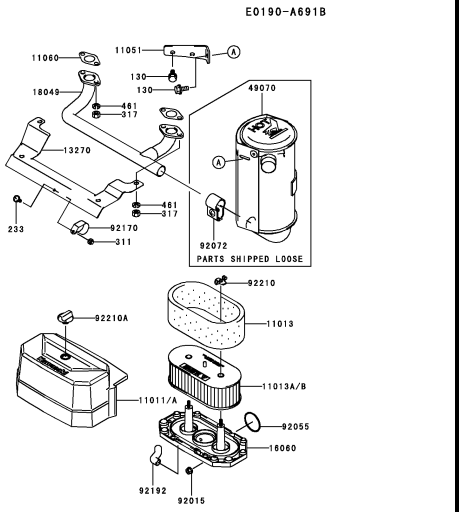

B-11 **AIR-FILTER/MUFFLER**

This catalog covers:

FH541V- □ S21

GRID NO. **C-01** *This grid covers:*

PICTORIAL INDEX

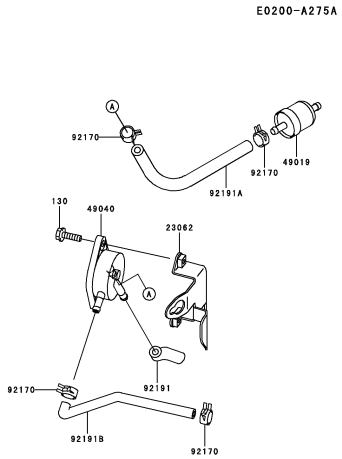

C-03 **FUEL-TANK/FUEL-VALVE**

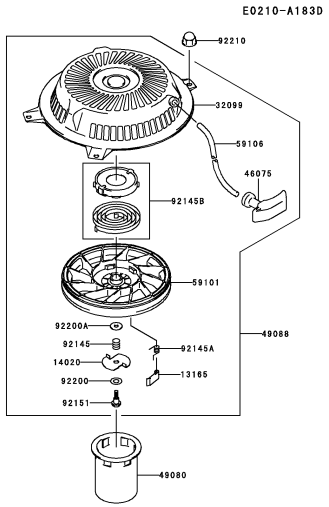

C-04 **STARTER**

F0290-B133A

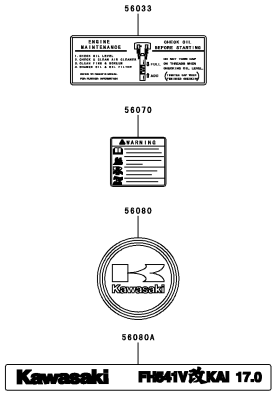

D-03 **LABEL**

This catalog covers:

FH541V- □ S21

GRID NO. **B-03**

This grid covers:

CYLINDER/CRANKCASE

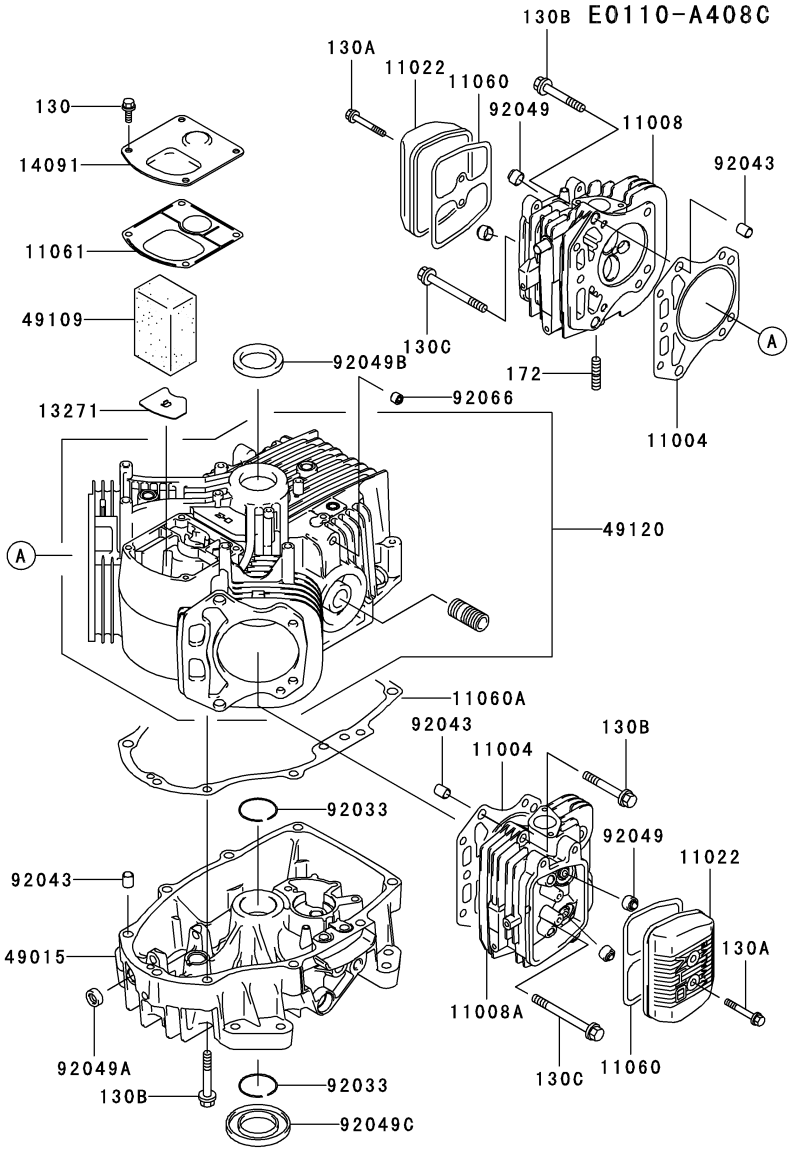

Ref. No.	Part No.	Description	Quantity A
11004	11004-7010	GASKET-HEAD	2
11008	11008-6042	HEAD-COMP-CYLINDER	1
11008A	11008-7009	HEAD-COMP-CYLINDER	1
11022	11022-7003	CASE-ROCKER	2
11060	11060-7001	GASKET,ROCKER CASE	2
11060A	11060-7008	GASKET,CRANKCASE COVER	1
11061	11061-7001	GASKET,BREATHER	1
13271	13271-7016	PLATE	1
14091	14091-7006	COVER	1
49015	49015-6253	COVER-CRANKCASE	1
49109	49109-7002	ELEMENT-BREATHER	1
49120	49120-7023	CRANKCASE-COMP	1
92033	92033-7003	RING-SNAP	2
92043	92043-7001	PIN	6
92049	92049-7001	SEAL-OIL,RVC2 6X11X10.2	4
92049A	92049-7005	SEAL-OIL,SO 8X14X5 HS	1
92049B	92049-7010	SEAL-OIL,SD 35X48X8 R HS	1
92049C	92049-7011	SEAL-OIL,SD 35X62X8 L HS	1
92066	92066-7002	PLUG	1
130	130B0612	BOLT-FLANGED	4
130A	130B0640	BOLT-FLANGED	4
130B	130T0850	BOLT-FLANGED	17
130C	130T0875	BOLT-FLANGED	2
172	172G0818	BOLT-STUD	4

E0120-A211A

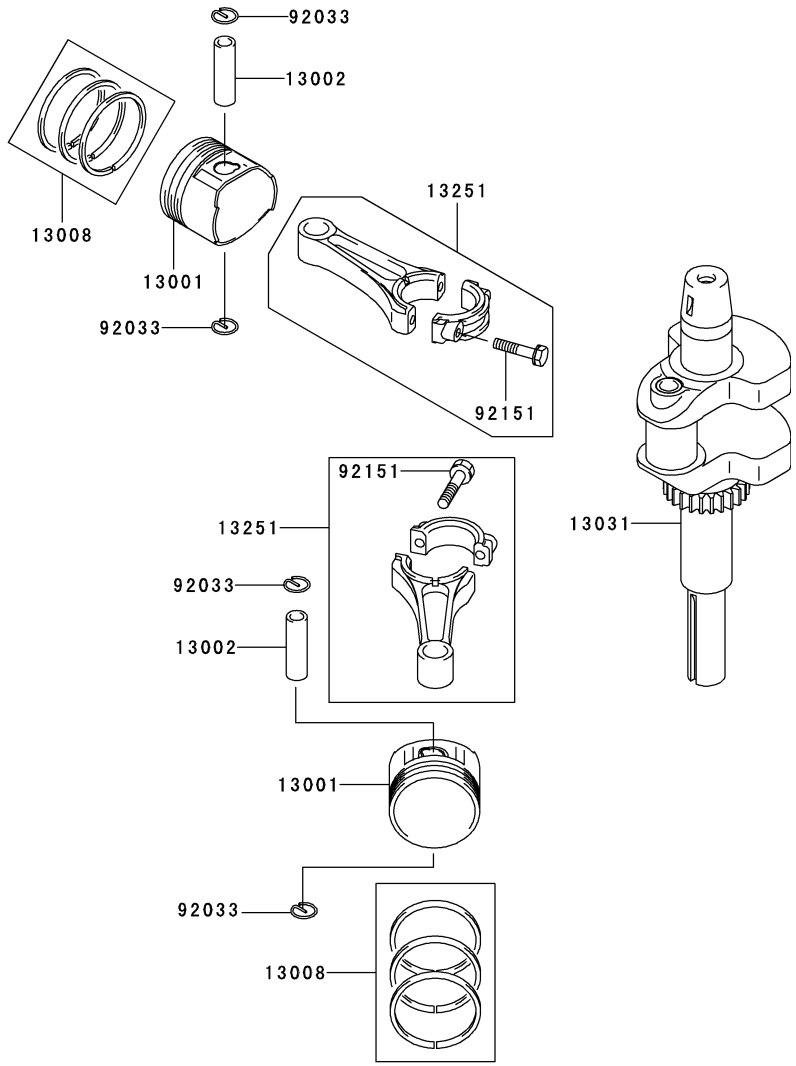

Ref. No.	Part No.	Description	Quantity A
13001	13001-7010	PISTON-ENGINE	2
13002	13002-7001	PIN-PISTON	2
13008	13008-6060	RING-SET-PISTON	2
13031	13031-7036	CRANKSHAFT-COMP	1
13251	13251-7010	ROD-ASSY-CONNECTING	2
92033	92033-7005	RING-SNAP	4
92151	92151-7017	BOLT,6X35	4

This catalog covers:

FH541V- □ S21

GRID NO. **B-05**

This grid covers:

VALVE/CAMSHAFT

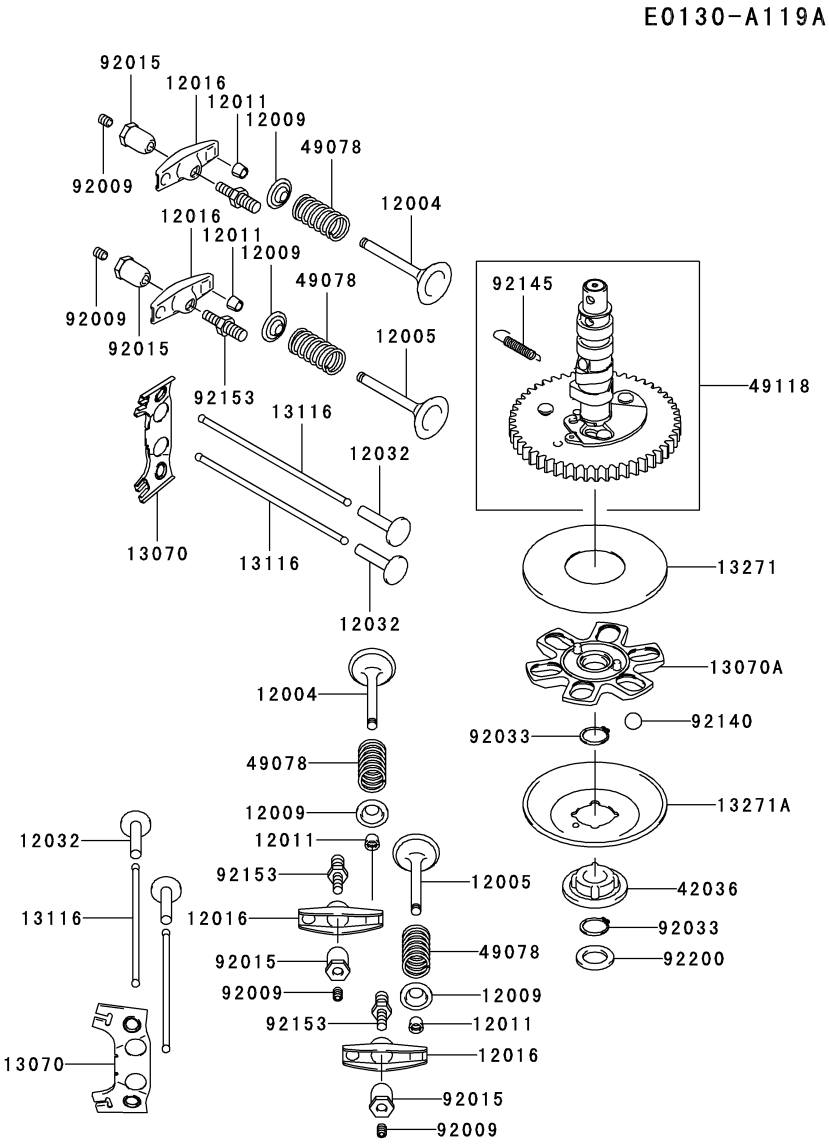

Ref. No.	Part No.	Description	Quantity A
12004	12004-7003	VALVE-INTAKE	2
12005	12005-7003	VALVE-EXHAUST	2
12009	12009-7001	RETAINER-VALVE SPRING	4
12011	12011-2056	COLLET	8
12016	12016-7001	ARM-ROCKER	4
12032	12032-7001	TAPPET	4
13070	13070-7001	GUIDE	2
13070A	13070-7004	GUIDE	1
13116	13116-2057	ROD-PUSH	4
13271	13271-7007	PLATE	1
13271A	13271-7021	PLATE,GOVERNOR	1
42036	42036-7009	SLEEVE	1
49078	49078-7001	SPRING-ENGINE VALVE	4
49118	49118-7004	CAMSHAFT-COMP	1
92009	92009-2341	SCREW	4
92015	92015-2253	NUT	4
92033	92033-7001	RING-SNAP	2
92140	92140-7002	BALL	6
92145	92145-7001	SPRING	1
92153	92153-7019	BOLT	4
92200	92200-7001	WASHER	1

E0140-A202A

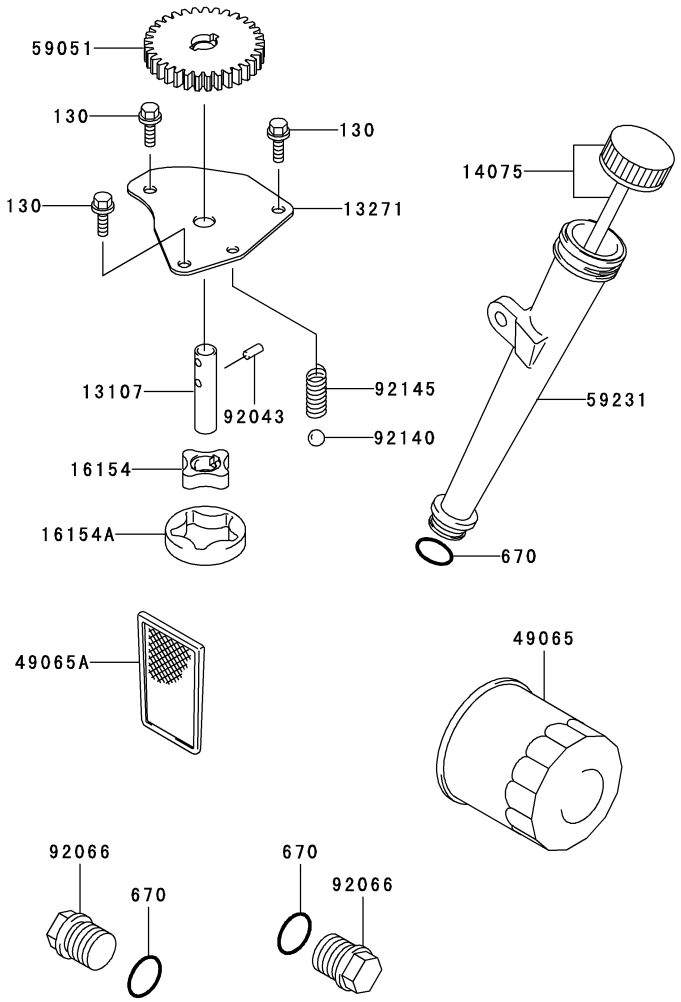

Ref. No.	Part No.	Description	Quantity A
13107	13107-7009	SHAFT	1
13271	13271-7017	PLATE	1
14075	14075-7009	CAP-ASSY	1
16154	16154-2053	ROTOR-PUMP,IN	1
16154A	16154-2054	ROTOR-PUMP,OUT	1
49065	49065-2078	FILTER-OIL	1
49065A	49065-7004	FILTER-OIL	1
59051	59051-7011	GEAR-SPUR	1
59231	59231-7005	FILLER	1
92043	92043-7003	PIN	2
92066	92066-7003	PLUG	2
92140	92140-7003	BALL	1
92145	92145-7002	SPRING	1
130	130B0612	BOLT-FLANGED	3
670	670D2016	O RING,16MM	3

E0150-A573A

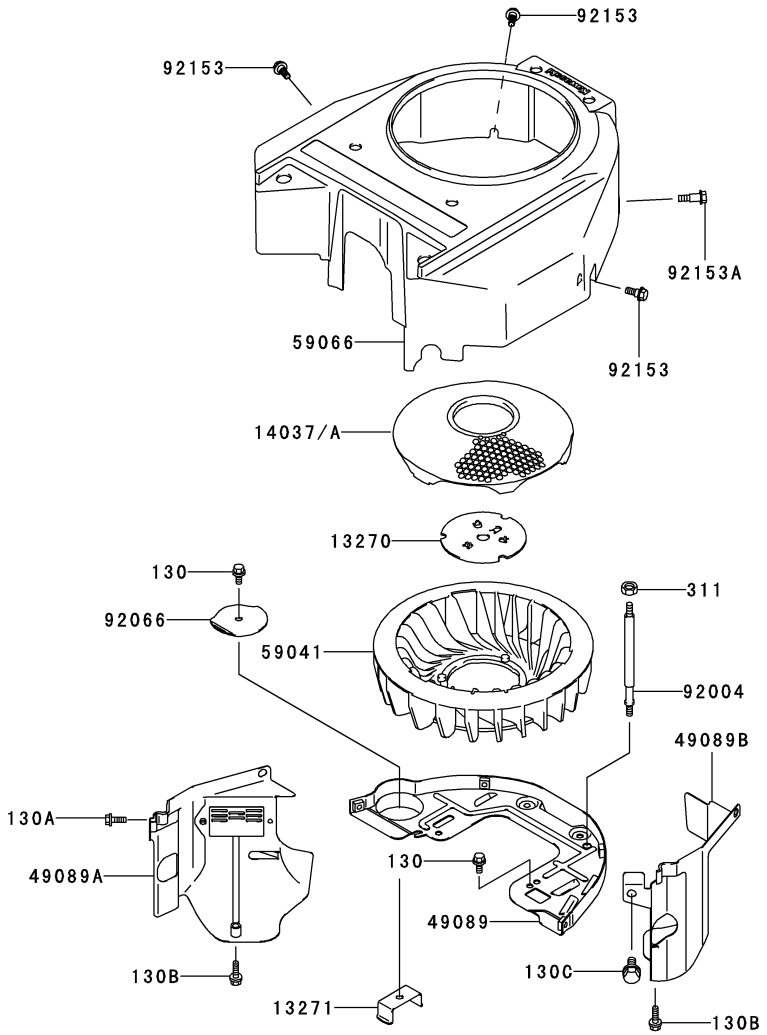

Ref. No.	Part No.	Description	Quantity A
13270	13270-7007	PLATE	1
13271	13271-7002	PLATE	1
14037	14037-7015-9H	SCREEN	*
14037A	14037-7021-9H	SCREEN	1
49089	49089-7032	SHROUD-ENGINE	1
49089A	49089-7042	SHROUD-ENGINE	1
49089B	49089-7043	SHROUD-ENGINE	1
59041	59041-7010	FAN	1
59066	59066-7017	HOUSING-FAN	1
92004	92004-7006	STUD	2
92066	92066-7004	PLUG	1
92153	92153-7007	BOLT	3
92153A	92153-7008	BOLT	1
130	130B0612	BOLT-FLANGED	3
130A	130B0616	BOLT-FLANGED	2
130B	130B0625	BOLT-FLANGED	2
130C	130B0816	BOLT-FLANGED	1
311	311B0600	NUT-HEX	2

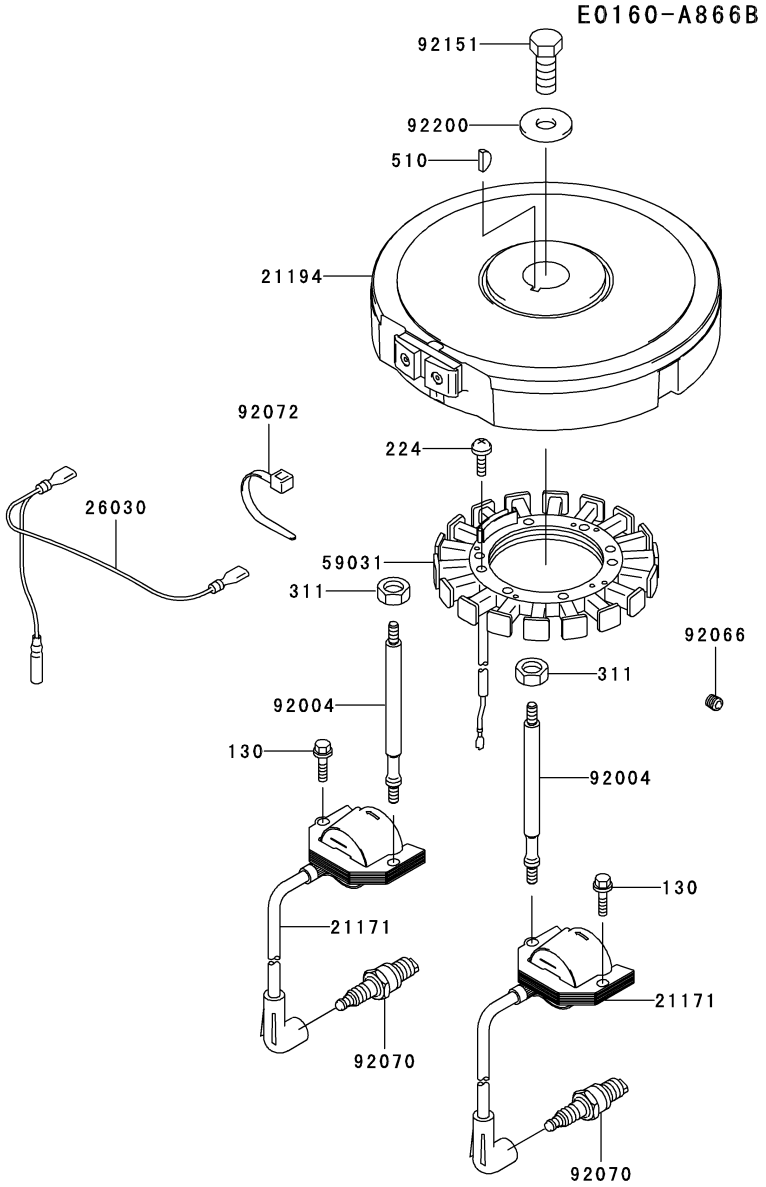

Ref. No.	Part No.	Description	Quantity A
21171	21171-7013	COIL-ASSY-IGNITION	2
21194	21194-7007	FLYWHEEL-COMP	1
26030	26030-7001	HARNESS	1
59031	59031-7002	COIL-CHARGING	1
92004	92004-7009	STUD	2
92066	92066-7002	PLUG	1
92070	92070-7003	PLUG-SPARK,RCJ8Y,SOLID	2
92072	92072-7003	BAND	2
92151	92151-2097	BOLT,12X30	1
92200	92200-7002	WASHER	1
130	130B0620	BOLT-FLANGED	2
224	224B0520	SCREW-PAN-WP-CROS	4
311	311B0600	NUT-HEX	2
510	510A5100	KEY-WOODRUFF	1

E0170-A484A

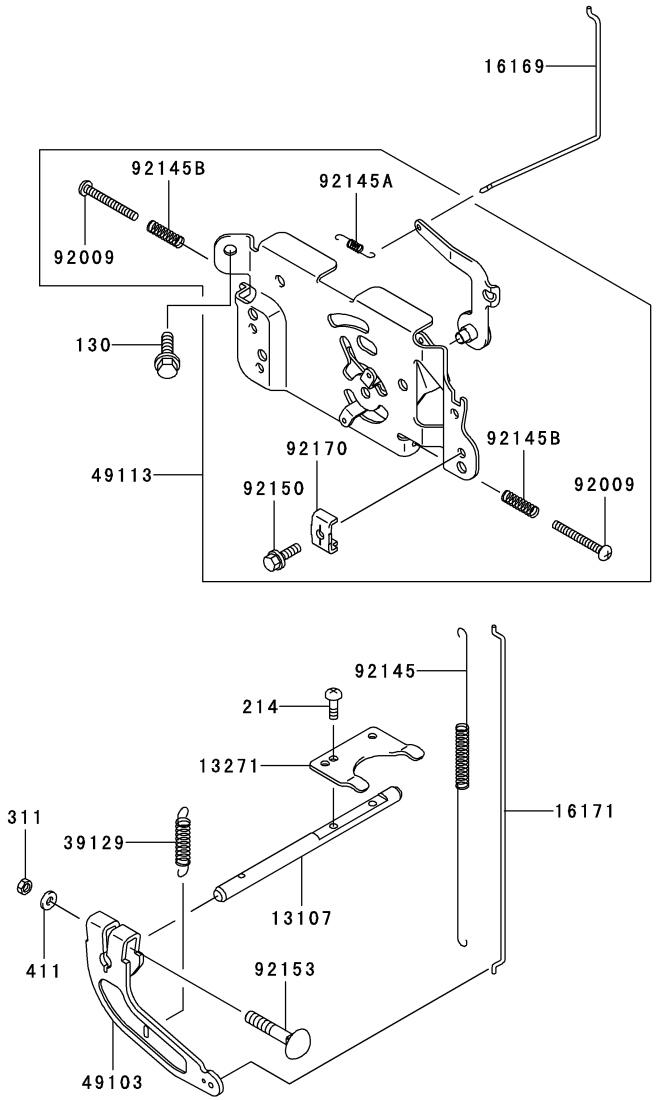

Ref. No.	Part No.	Description	Quantity A
13107	13107-7010	SHAFT	1
13271	13271-7018	PLATE	1
16169	16169-7010	LINK-CHOKE	1
16171	16171-7001	LINK	1
39129	39129-7003	SPRING-GOVERNOR	1
49103	49103-7004	ARM-GOVERNOR	1
49113	49113-7027	PANEL-COMP-CONTROL	1
92009	92009-7007	SCREW,4X35	2
92145	92145-7003	SPRING	1
92145A	92145-7004	SPRING	1
92145B	92145-7005	SPRING	2
92150	92150-2182	BOLT,5X18	1
92153	92153-7005	BOLT,6X35	1
92170	92170-7001	CLAMP	1
130	130B0612	BOLT-FLANGED	2
214	214B0408	SCREW-PAN+-	2
311	311B0600	NUT-HEX	1
411	411B0600	WASHER-PLAIN	1

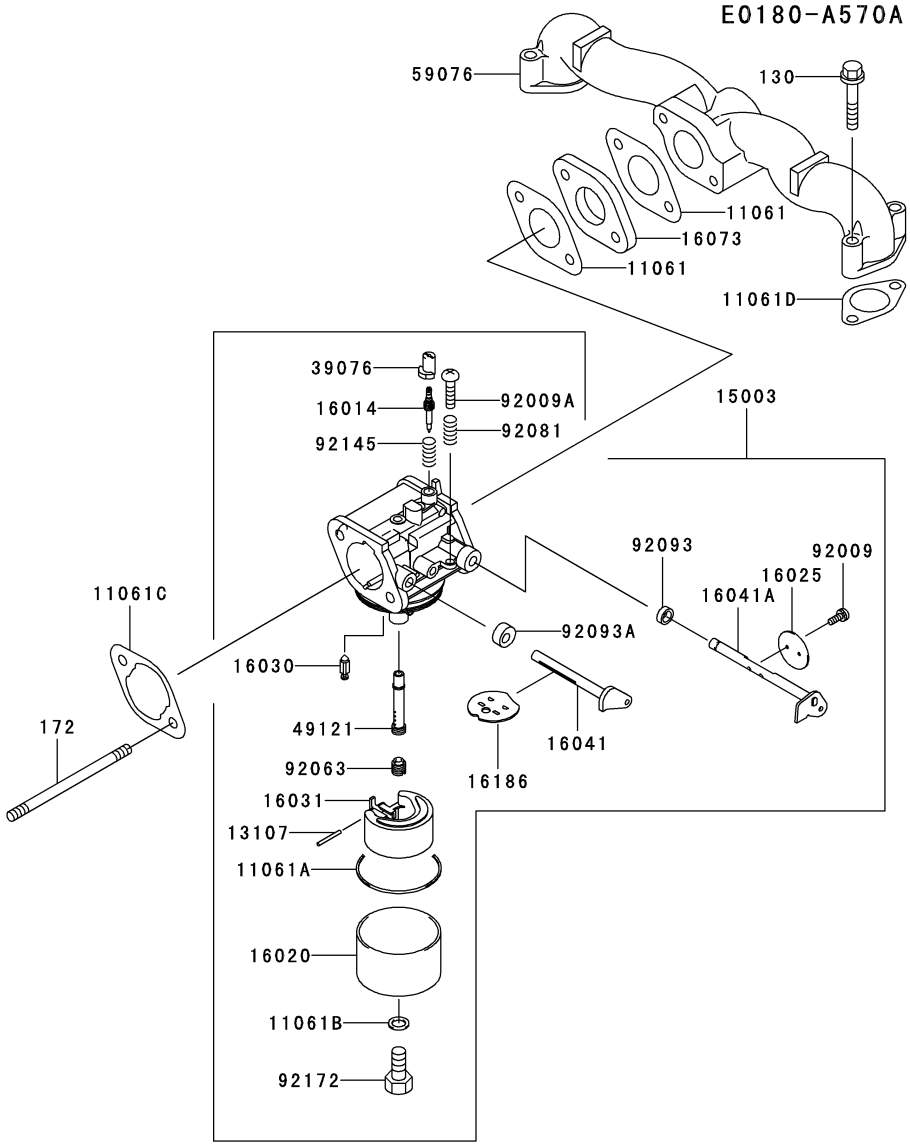

Ref. No.	Part No.	Description	Quantity A
11061	11061-7004	GASKET,INSULATOR	2
11061A	11061-7009	GASKET,CHAMBER	1
11061B	11061-7010	GASKET	1
11061C	11061-7018	GASKET,AIR CLEANER	1
11061D	11061-7019	GASKET	2
13107	13107-7018	SHAFT	1
15003	15003-7107	CARBURETOR-ASSY	1
16014	16014-7007	SCREW-PILOT AIR	1
16020	16020-7003	CHAMBER-FLOAT	1
16025	16025-7006	VALVE-THROTTLE	1
16030	16030-7003	VALVE-FLOAT	1
16031	16031-7002	FLOAT	1
16041	16041-7016	SHAFT-CARBURETOR,CHOKE	1
16041A	16041-7018	SHAFT-CARBURETOR,THROTTLE	1
16073	16073-7007	INSULATOR	1
16186	16186-7004	VALVE-ASSY-CHOKE	1
39076	39076-7001	LIMITER	1
49121	49121-7010	NOZZLE-MAIN	1
59076	59076-7001	MANIFOLD-INTAKE	1
92009	92009-2083	SCREW	2
92009A	92009-2349	SCREW	1
92063	92063-7065	JET-MAIN,#112	1
92081	92081-2234	SPRING	1
92093	92093-2100	SEAL	1
92093A	92093-7003	SEAL	1
92145	92145-7015	SPRING	1
92172	92172-7002	SCREW	1
130	130B0635	BOLT-FLANGED	4
172	172G0690	BOLT-STUD	2

E0190-A691B

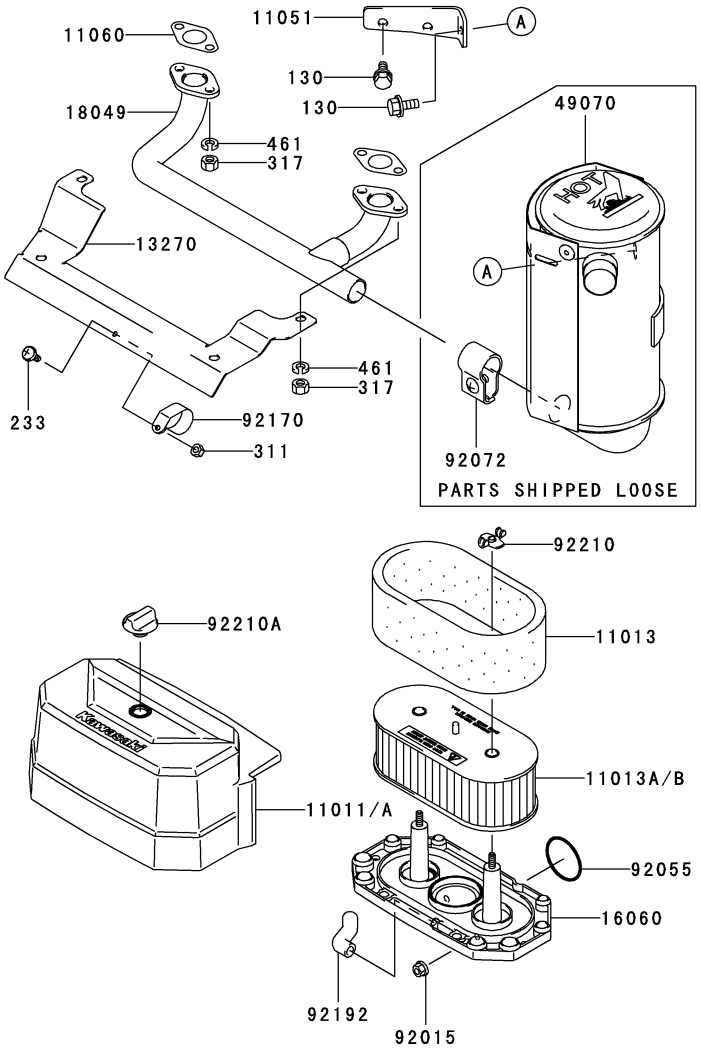

Ref. No.	Part No.	Description	Quantity A
11011	11011-7027	CASE-AIR FILTER	*
11011A	11011-7033	CASE-AIR FILTER	1
11013	11013-7025	ELEMENT-AIR FILTER	1
11013A	11013-7026	ELEMENT-AIR FILTER	*
11013B	11013-7031	ELEMENT-AIR FILTER	1
11051	11051-7005-9H	BRACKET	1
11060	11060-7021	GASKET,MUFFLER	2
13270	13270-7008	PLATE	1
16060	16060-7016	PIPE-INTAKE	1
18049	18049-7001	PIPE-EXHAUST	1
49070	49070-7015	MUFFLER-COMP	1
92015	92015-1193	NUT	2
92055	92055-7015	RING-O	1
92072	92072-7008	BAND	1
92170	92170-7002	CLAMP	1
92192	92192-7010	TUBE	1
92210	92210-7004	NUT	2
92210A	92210-7019	NUT	1
130	130B0816	BOLT-FLANGED	2
233	233B0416	SCREW-PAN-WP+-	1
311	311B0400	NUT-HEX	1
317	317R0800	NUT-HEX-SMALL	4
461	461F0800	WASHER-SPRING	4

E0200-A275A

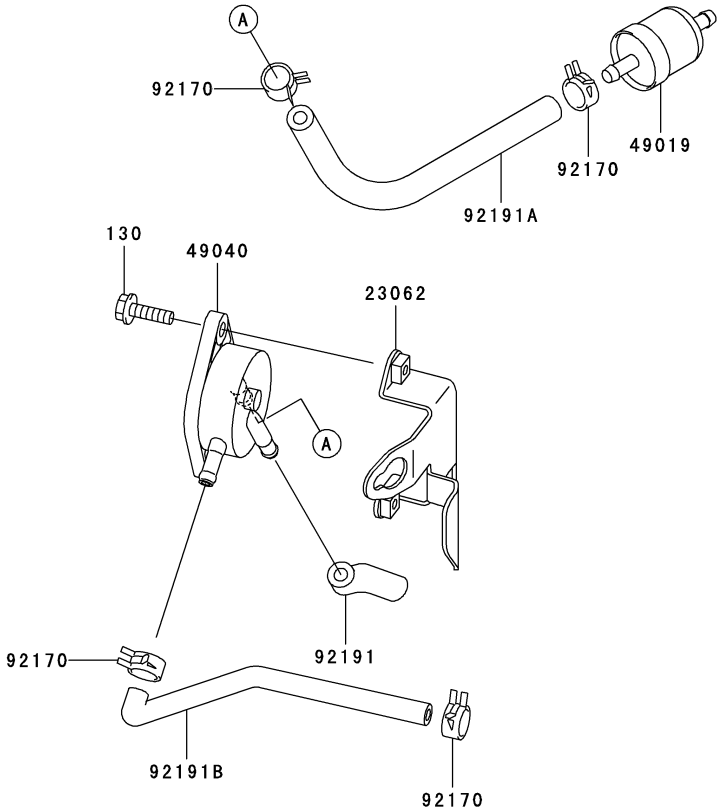

Ref. No.	Part No.	Description	Quantity A
23062	23062-7004-9H	BRACKET-COMP	1
49019	49019-7001	FILTER-FUEL	1
49040	49040-7001	PUMP-FUEL	1
92170	92170-2088	CLAMP	4
92191	92191-7002	TUBE	1
92191A	92191-7003	TUBE,6.35X12.7X160	1
92191B	92191-7004	TUBE	1
130	130B0620	BOLT-FLANGED	2

E0210-A183D

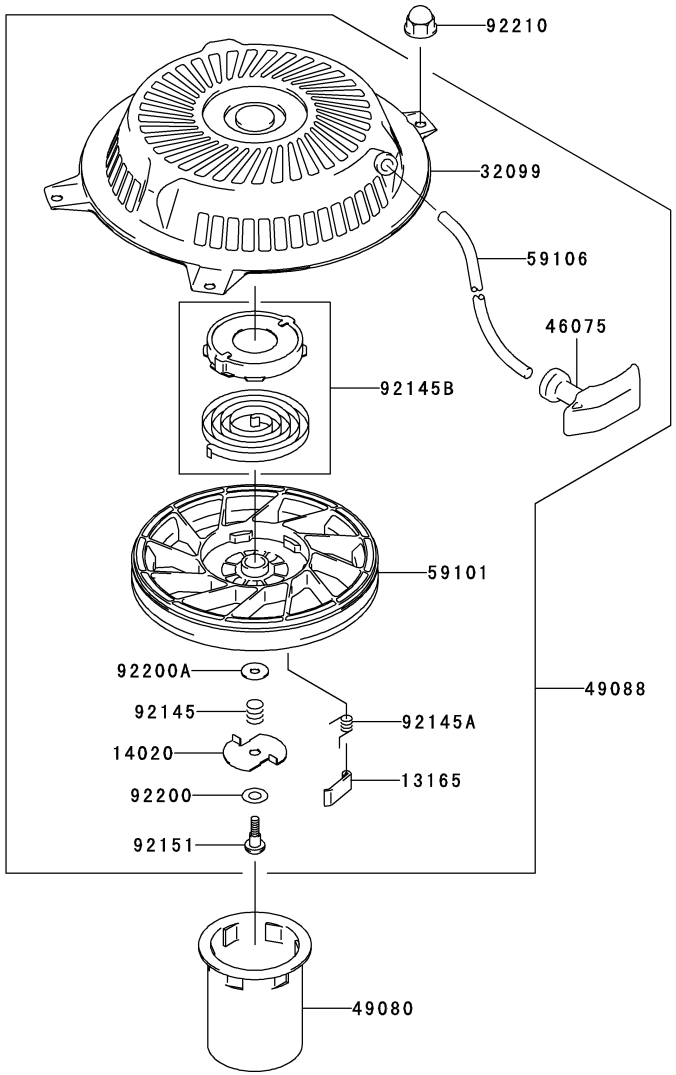

Ref. No.	Part No.	Description	Quantity A
13165	13165-7001	PAWL,RECOIL STARTER	2
14020	14020-7001	RETAINER	1
32099	32099-7001	CASE,RECOIL STARTER	1
46075	46075-7001	GRIP,RECOIL STARTER	1
49080	49080-7001	PULLEY-STARTING	1
49088	49088-7012	STARTER-RECOIL	1
59101	59101-7001	REEL,RECOIL STARTER	1
59106	59106-7001	ROPE	1
92145	92145-7006	SPRING	1
92145A	92145-7007	SPRING	2
92145B	92145-7008	SPRING	1
92151	92151-7008	BOLT	1
92200	92200-7004	WASHER	1
92200A	92200-7005	WASHER	1
92210	92210-0003	NUT	4

F0290-B133A

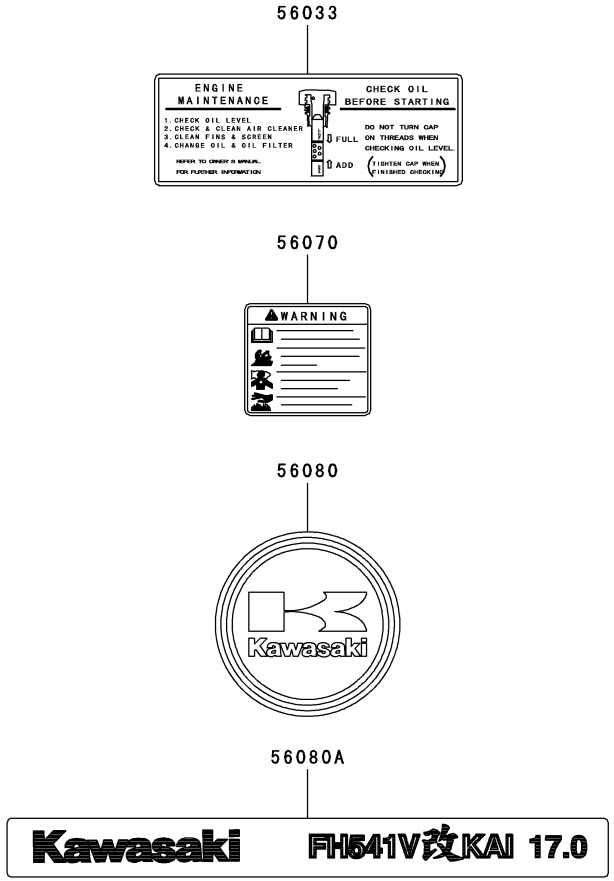

Ref. No.	Part No.	Description	Quantity A
56033	56033-7002	LABEL-MANUAL	1
56070	56070-7001	LABEL-WARNING	1
56080	56080-2077	LABEL-BRAND	1
56080A	56080-7023	LABEL-BRAND	1

PART NAME INDEX

AIR-FILTER/MUFFLER B-11
CARBURETOR B-10
CONTROL-EQUIPMENT B-09
COOLING-EQUIPMENT B-07
CYLINDER/CRANKCASE B-03
ELECTRIC-EQUIPMENT B-08
FUEL-TANK/FUEL-VALVE C-03
LABEL D-03
LUBRICATION-EQUIPMENT B-06
PISTON/CRANKSHAFT B-04
STARTER C-04
VALVE/CAMSHAFT B-05

This catalog covers:

FH541V- □ S21

GRID NO. **H-10**

This grid covers:

NUMERICAL PARTS INDEX

Part No.	Grid No.	Part No.	Grid No.	Part No.	Grid No.	Part No.	Grid No.	Part No.	Grid No.
11004-7010	B-03	14037-7015-9H	B-07	56033-7002	D-03	92153-7019	B-05		
11008-6042	B-03	14037-7021-9H	B-07	56070-7001	D-03	92170-2088	C-03		
11008-7009	B-03	14075-7009	B-06	56080-2077	D-03	92170-7001	B-09		
11011-7027	B-11	14091-7006	B-03	56080-7023	D-03	92170-7002	B-11		
11011-7033	B-11	15003-7107	B-10	59031-7002	B-08	92172-7002	B-10		
11013-7025	B-11	16014-7007	B-10	59041-7010	B-07	92191-7002	C-03		
11013-7026	B-11	16020-7003	B-10	59051-7011	B-06	92191-7003	C-03		
11013-7031	B-11	16025-7006	B-10	59066-7017	B-07	92191-7004	C-03		
11022-7003	B-03	16030-7003	B-10	59076-7001	B-10	92192-7010	B-11		
11051-7005-9H	B-11	16031-7002	B-10	59101-7001	C-04	92200-7001	B-05		
11060-7001	B-03	16041-7016	B-10	59106-7001	C-04	92200-7002	B-08		
11060-7008	B-03	16041-7018	B-10	59231-7005	B-06	92200-7004	C-04		
11060-7021	B-11	16060-7016	B-11	670D2016	B-06	92200-7005	C-04		
11061-7001	B-03	16073-7007	B-10	92004-7006	B-07	92210-0003	C-04		
11061-7004	B-10	16154-2053	B-06	92004-7009	B-08	92210-7004	B-11		
11061-7009	B-10	16154-2054	B-06	92009-2083	B-10	92210-7019	B-11		
11061-7010	B-10	16169-7010	B-09	92009-2341	B-05				
11061-7018	B-10	16171-7001	B-09	92009-2349	B-10				
11061-7019	B-10	16186-7004	B-10	92009-7007	B-09				
12004-7003	B-05	172G0690	B-10	92015-1193	B-11				
12005-7003	B-05	172G0818	B-03	92015-2253	B-05				
12009-7001	B-05	18049-7001	B-11	92033-7001	B-05				
12011-2056	B-05	21171-7013	B-08	92033-7003	B-03				
12016-7001	B-05	21194-7007	B-08	92033-7005	B-04				
12032-7001	B-05	214B0408	B-09	92043-7001	B-03				
13001-7010	B-04	224B0520	B-08	92043-7003	B-06				
13002-7001	B-04	23062-7004-9H	C-03	92049-7001	B-03				
13008-6060	B-04	233B0416	B-11	92049-7005	B-03				
13031-7036	B-04	26030-7001	B-08	92049-7010	B-03				
13070-7001	B-05	311B0400	B-11	92049-7011	B-03				
13070-7004	B-05	311B0600	B-07	92055-7015	B-11				
130B0612	B-03	311B0600	B-08	92063-7065	B-10				
130B0612	B-06	311B0600	B-09	92066-7002	B-03				
130B0612	B-07	317R0800	B-11	92066-7002	B-08				
130B0612	B-09	32099-7001	C-04	92066-7003	B-06				
130B0616	B-07	39076-7001	B-10	92066-7004	B-07				
130B0620	B-08	39129-7003	B-09	92070-7003	B-08				
130B0620	C-03	411B0600	B-09	92072-7003	B-08				
130B0625	B-07	42036-7009	B-05	92072-7008	B-11				
130B0635	B-10	46075-7001	C-04	92081-2234	B-10				
130B0640	B-03	461F0800	B-11	92093-2100	B-10				
130B0816	B-07	49015-6253	B-03	92093-7003	B-10				
130B0816	B-11	49019-7001	C-03	92140-7002	B-05				
130T0850	B-03	49040-7001	C-03	92140-7003	B-06				
130T0875	B-03	49065-2078	B-06	92145-7001	B-05				
13107-7009	B-06	49065-7004	B-06	92145-7002	B-06				
13107-7010	B-09	49070-7015	B-11	92145-7003	B-09				
13107-7018	B-10	49078-7001	B-05	92145-7004	B-09				
13116-2057	B-05	49080-7001	C-04	92145-7005	B-09				
13165-7001	C-04	49088-7012	C-04	92145-7006	C-04				
13251-7010	B-04	49089-7032	B-07	92145-7007	C-04				
13270-7007	B-07	49089-7042	B-07	92145-7008	C-04				
13270-7008	B-11	49089-7043	B-07	92145-7015	B-10				
13271-7002	B-07	49103-7004	B-09	92150-2182	B-09				
13271-7007	B-05	49109-7002	B-03	92151-2097	B-08				
13271-7016	B-03	49113-7027	B-09	92151-7008	C-04				
13271-7017	B-06	49118-7004	B-05	92151-7017	B-04				
13271-7018	B-09	49120-7023	B-03	92153-7005	B-09				
13271-7021	B-05	49121-7010	B-10	92153-7007	B-07				
14020-7001	C-04	510A5100	B-08	92153-7008	B-07				