PDFMAILER.DE winload.de - Das ultimative Downloadarchiv für Free- & Shareware. Über 5000 Programme, da findet jeder das, was er braucht!

Katalogtitel
FA130D- S54

Block-Nr.
B-11

Blocktitel.
AIR-FILTER/MUFFLER

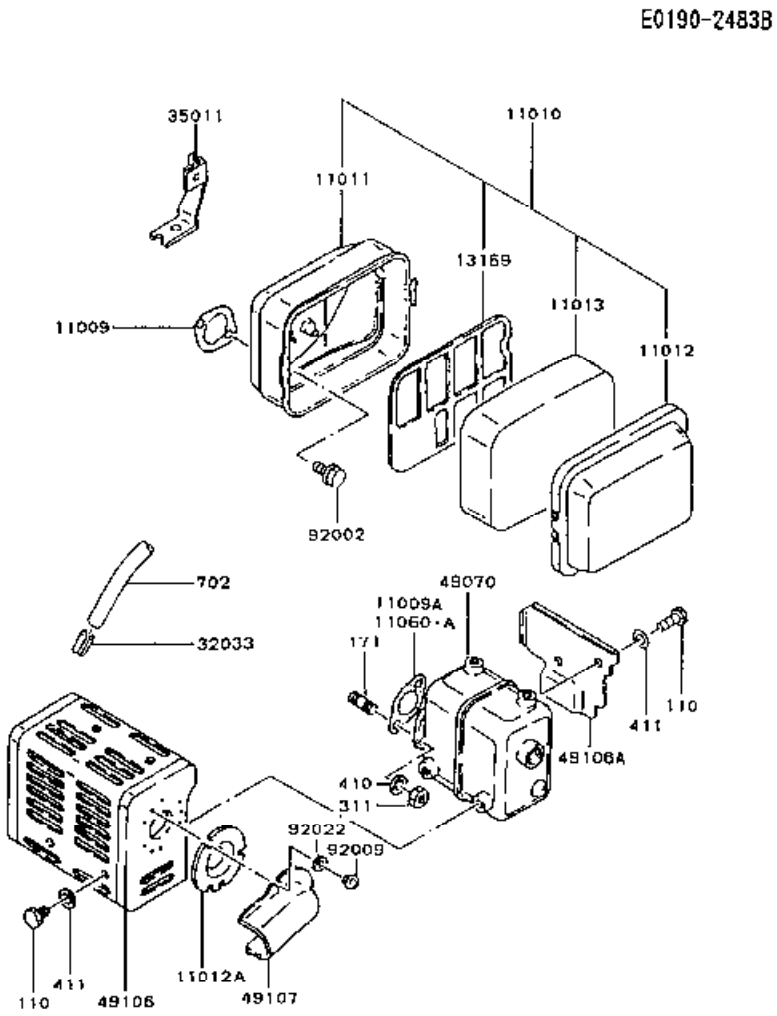

Ref.- Nr.	Teile-nr.	Beschreibung
110	110R0608	Bolt
171	171G0616	Bolt-stud
311	311B0600	Nut-hex
410	410B0600	W-plain-s
411	411B0600	Washer-plain
702	702A071000	Tube-rubber
11009	11009-2102	Gasket
11009a	11009-2108	Gasket
11010	11010-2062	Filter-assy-air
11011	11011-2052	Case-air Filter
11012	11012-2102	Cap,air Filter
11012a	11012-2107-9Z	Cap
11013	11013-2052	Element-air Filter
11060	11060-2043	Gasket,muffler
11060a	11060-2043	Gasket,muffler
13169	13169-2124	Plate
32033	32033-2001	Pipe
35011	35011-2057	Stay
49070	49070-2066-9Z	Muffler-comp
49106	49106-2323-YM	Cover-muffler
49106a	49106-2442-YM	Cover-muffler
49107	49107-2054-9Z	Cover-exhaust Pipe
92002	92002-2051	Bolt
92009	92009-2155	Screw
92022	92022-2125	Washer

Copyright © 2003 Kawasaki Engine & Powerproducts. Alle Rechte vorbehalten.

PDFMAILER.DE winload.de - Das ultimative Downloadarchiv für Free- & Shareware. Über 5000 Programme, da findet jeder das, was er braucht!

Katalogtitel
FA130D- S54

Block-Nr.
B-10

Blocktitel.
CARBURETOR

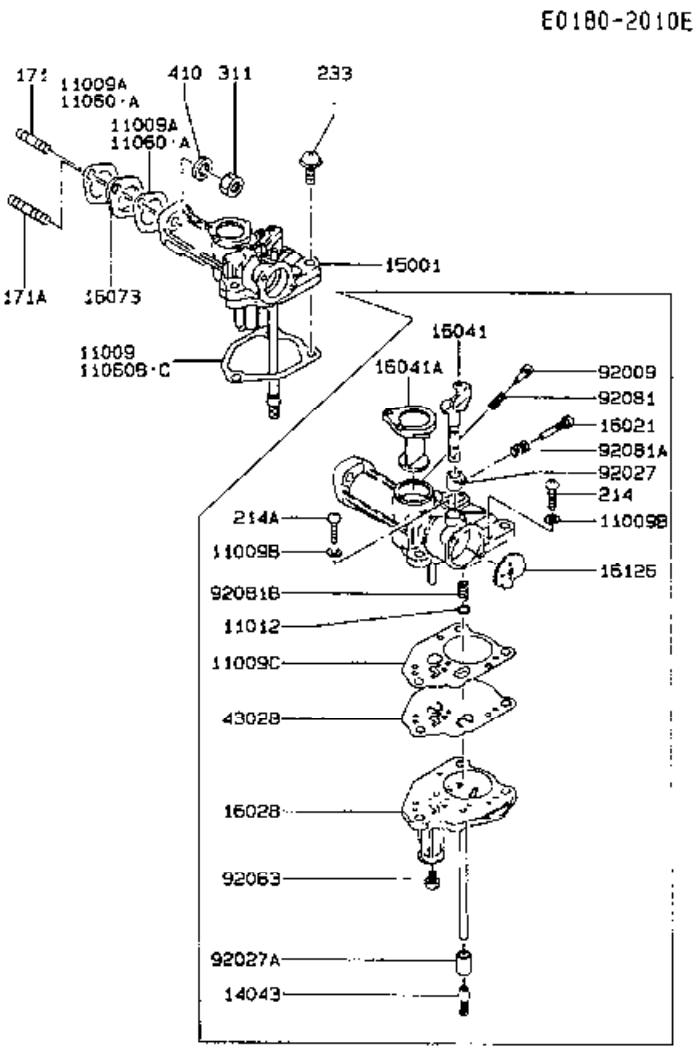

Ref.- Nr.	Teile-nr.	Beschreibung
171	171G0625	Bolt-stud
171a	171G0640	Bolt-stud
214	214B0414	Screw-pan+-
214a	214B0428	Screw-pan+-
233	233B0625	Screw-pan-wp+-
311	311B0600	Nut-hex
410	410B0600	W-plain-s
11009	11009-2103	Gasket
11009a	11009-2104	Gasket
11009b	11009-2067	Gasket
11009c	11009-2379	Gasket
11012	11012-2067	Cap
11060	11060-2033	Gasket,air Filter
11060a	11060-2033	Gasket,air Filter
11060b	11060-2035	Gasket,carburetor
11060c	11060-2035	Gasket,carburetor
14043	14043-2005	Filter
15001	15001-2545	Carburetor-assy
16021	16021-2010	Screw-throttle Stop
16028	16028-2057	Chamber-mixing
16041	16041-2094	Shaft-carburetor
16041a	16041-2093	Shaft-carburetor
16073	16073-2056	Insulator
16126	16126-2132	Valve
43028	43028-2057	Diaphragm
92009	16014-2059	Screw
92027	92027-2013	Collar
92027a	92027-2014	Collar
92063	92063-2128	Jet-main,#72
92081	92081-2271	Spring
92081a	92081-2270	Spring
92081b	92081-2057	Spring

Copyright © 2003 Kawasaki Engine & Powerproducts. Alle Rechte vorbehalten.

PDFMAILER.DE winload.de - Das ultimative Downloadarchiv für Free- & Shareware. Über 5000 Programme, da findet jeder das, was er braucht!

Katalogtitel
FA130D- S54

Block-Nr.
B-09

Blocktitel.
CONTROL-EQUIPMENT

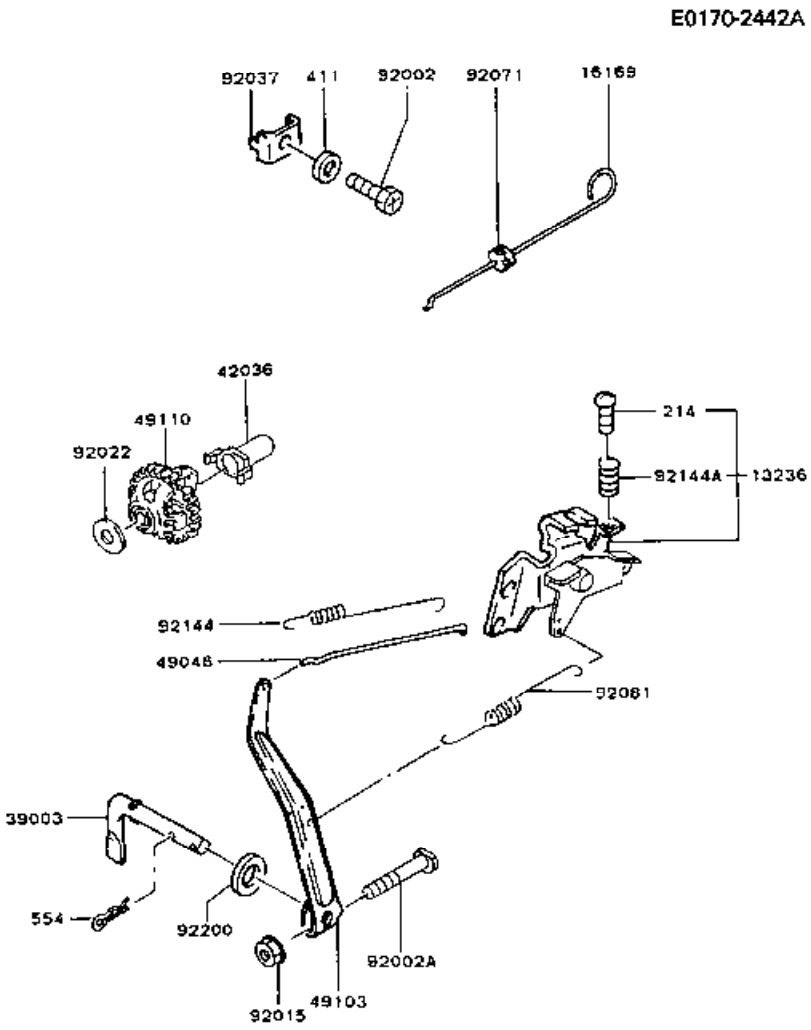

Ref.- Nr.	Teile-nr.	Beschreibung
214	214B0420	Screw-pan+-
411	411B0500	Washer-plain
554	554A0600	Pin-snap
13236	13236-2006	Lever-comp
16169	16169-2099	Link-choke
39003	39003-2068	Arm-pivot
42036	42036-2051	Sleeve
49046	49046-2062	Rod-governor
49103	49103-2051	Arm-governor
49110	49110-2051	Governor-assy
92002	92002-2087	Bolt
92002a	92002-2269	Bolt
92015	92015-1193	Nut
92022	92022-2019	Washer
92037	92037-2020	Clamp
92071	92071-2102	Grommet
92081	92081-2102	Spring
92144	92144-2244	Spring
92144a	92144-2266	Spring
92200	92200-2029	Washer,6.5x11.5x2.0

Copyright © 2003 Kawasaki Engine & Powerproducts. Alle Rechte vorbehalten.

PDFMAILER.DE winload.de - Das ultimative Downloadarchiv für Free- & Shareware. Über 5000 Programme, da findet jeder das, was er braucht!

Katalogtitel
FA130D- S54

Block-Nr.
B-07

Blocktitel.
COOLING-EQUIPMENT

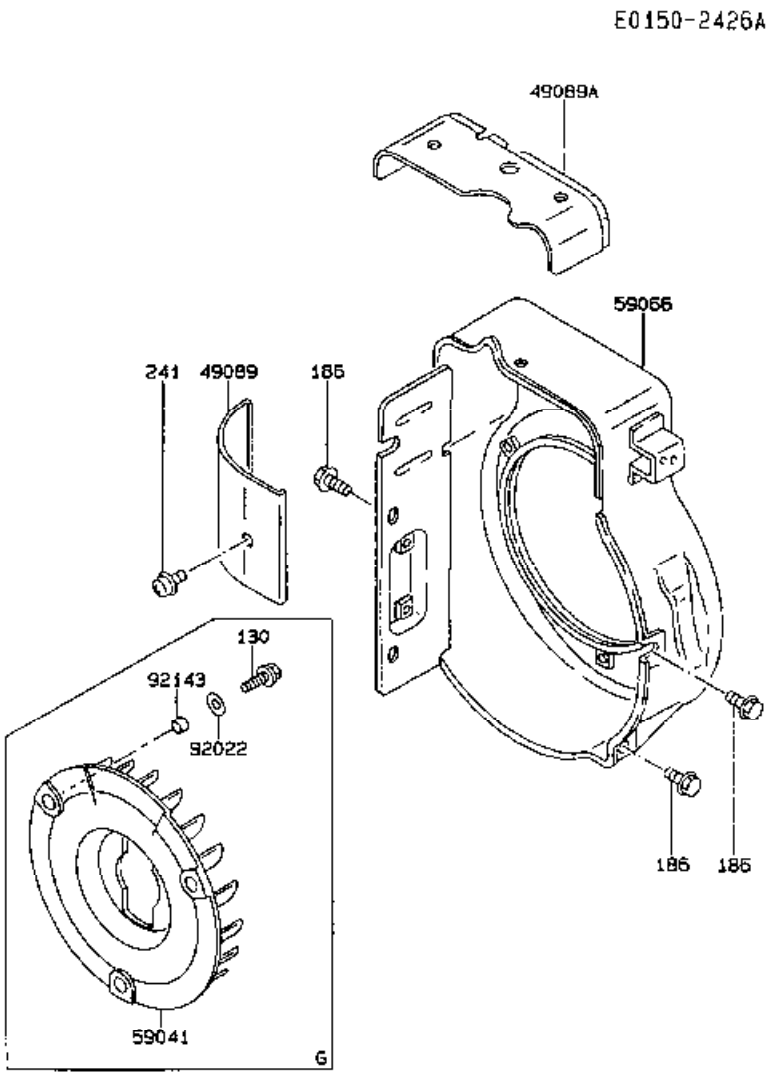

Ref.- Nr.	Teile-nr.	Beschreibung
130	130G0616	Bolt-flanged
186	186B0610	Bolt-upset-wp
241	241B0510	Screw-pan-wp+-
49089	49089-2052	Shroud-engine
49089a	49089-2051-9H	Shroud-engine
59041	59041-2077	Fan
59066	59066-2317-9H	Housing-fan
92022	92022-2089	Washer
92143	92143-2009	Collar

Copyright © 2003 Kawasaki Engine & Powerproducts. Alle Rechte vorbehalten.

PDFMAILER.DE winload.de - Das ultimative Downloadarchiv für Free- & Shareware. Über 5000 Programme, da findet jeder das, was er braucht!

Katalogtitel
FA130D- S54

Block-Nr.
B-03

Blocktitel.
CYLINDER/CRANKCASE

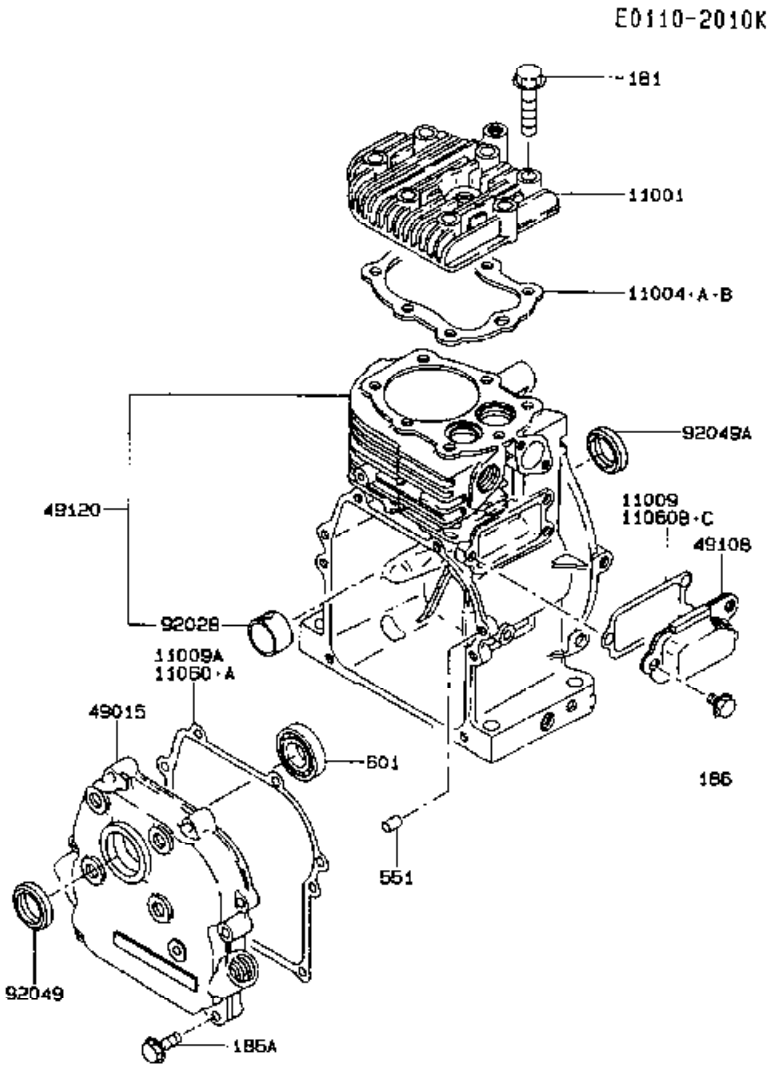

Ref.- Nr.	Teile-nr.	Beschreibung
181	181G0850	Bolt-upset-wp
186	186B0612	Bolt-upset-wp
186a	186B0630	Bolt-upset-wp
551	551A0612	Pin-dowel
601	601A6204	Bearing-ball
11001	11001-2051	Head-cylinder
11004	11004-2090	Gasket-head
11004a	11004-2090	Gasket-head
11004b	11004-2051	Gasket-head
11009	11009-2101	Gasket
11009a	11009-2107	Gasket
11060	11060-2041	Gasket,crankcase Cover
11060a	11060-2041	Gasket,crankcase Cover
11060b	11060-2042	Gasket
11060c	11060-2042	Gasket
49015	49015-6014	Cover-crankcase
49108	49108-2085	Cover-valve Chamber
49120	49120-6005	Crankcase-comp
92028	92028-2015	Bushing
92049	92049-2098	Seal-oil
92049a	92049-2198	Seal-oil

Copyright © 2003 Kawasaki Engine & Powerproducts. Alle Rechte vorbehalten.

PDFMAILER.DE winload.de - Das ultimative Downloadarchiv für Free- & Shareware. Über 5000 Programme, da findet jeder das, was er braucht!

Katalogtitel
FA130D- S54

Block-Nr.
B-08

Blocktitel.
ELECTRIC-EQUIPMENT

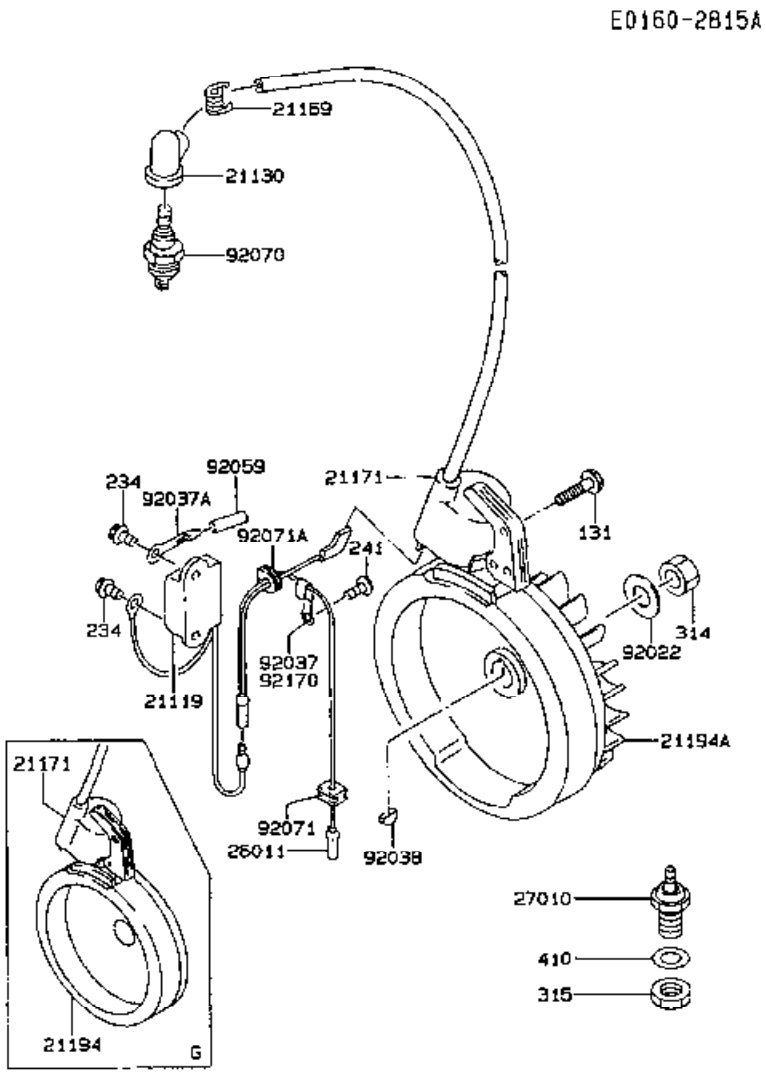

Ref.- Nr.	Teile-nr.	Beschreibung
131	131B0520	Bolt-flanged
234	234B0514	Screw-pan-wsp+-
241	241B0408	Screw-pan-wp+-
314	314G1400	Nut-hex-fine
315	315B1000	Nut-hex-fine
410	410B1000	W-plain-s
21119	21119-2091	Igniter
21130	21130-2066	Cap-spark Plug
21169	21169-2004	Terminal
21171	21171-2168	Coil-assy-ignition
21194	21194-2269	Flywheel-comp
21194a	21194-2106	Flywheel-comp
26011	26011-2080	Wire-lead
27010	27010-2067	Switch
92022	92022-2102	Washer
92037	92037-2104	Clamp
92037a	92037-2165	Clamp
92038	92038-2077	Key
92059	92059-2156	Tube,5x6x35
92070	92070-2051	Plug-spark,bm6a(ngk)
92071	92071-2004	Grommet
92071a	92071-2113	Grommet
92170	92170-2029	Clamp

Copyright © 2003 Kawasaki Engine & Powerproducts. Alle Rechte vorbehalten.

PDFMAILER.DE
winload.de - Das ultimative Downloadarchiv für Free- & Shareware. Über 5000 Programme, da findet jeder das, was er braucht!

Katalogtitel
FA130D- S54

Block-Nr.
C-03

Blocktitel.
FUEL-TANK/FUEL-VALVE

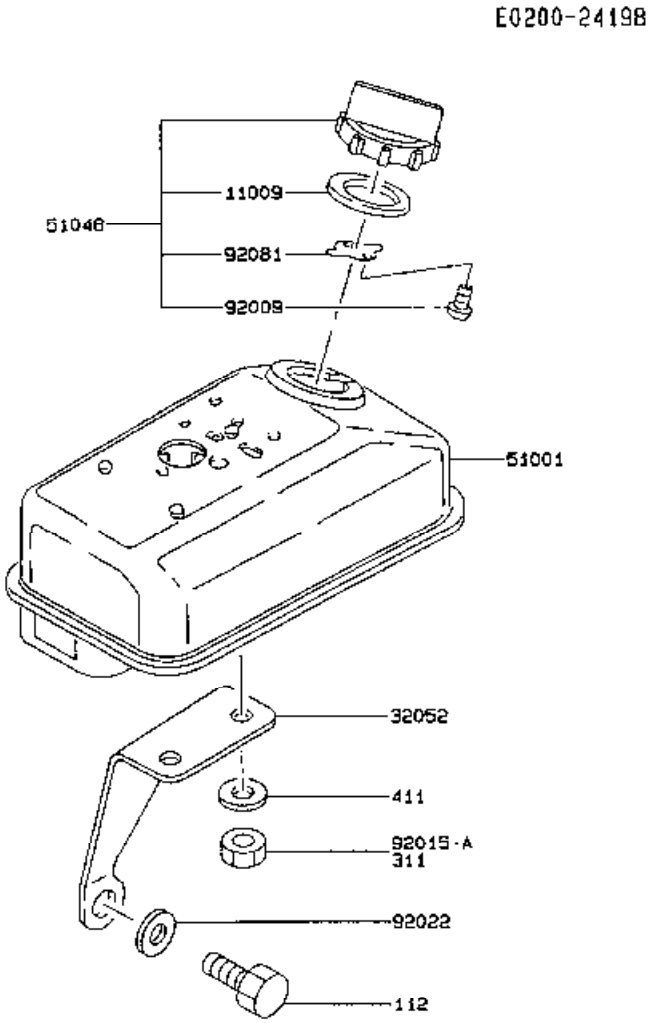

Ref.- Nr.	Teile-nr.	Beschreibung
112	112B0816	Bolt-upset
311	311B0800	Nut-hex
411	411B0800	Washer-plain
11009	11009-2105	Gasket
32052	32052-2072-9H	Bracket-tank
51001	51001-2063-9H	Tank-comp-fuel
51048	51048-2062	Cap-assy-tank
92009	92009-2021	Screw
92015	92015-1143	Nut
92015a	92015-1143	Nut
92022	92022-2104	Washer
92081	92081-2101	Spring

Copyright © 2003 Kawasaki Engine & Powerproducts. Alle Rechte vorbehalten.

PDFMAILER.DE
winload.de - Das ultimative Downloadarchiv für Free- & Shareware. Über 5000 Programme, da findet jeder das, was er braucht!

Katalogtitel
FA130D- S54

Block-Nr.
D-03

Blocktitel.
LABEL

Ref.- Nr.	Teile-nr.	Beschreibung
56030	56030-2469	Label
56031	56031-2095	Label-manual
56031a	56031-2096	Label-manual
56038	56038-2460	Label-brand

F0290-2902A

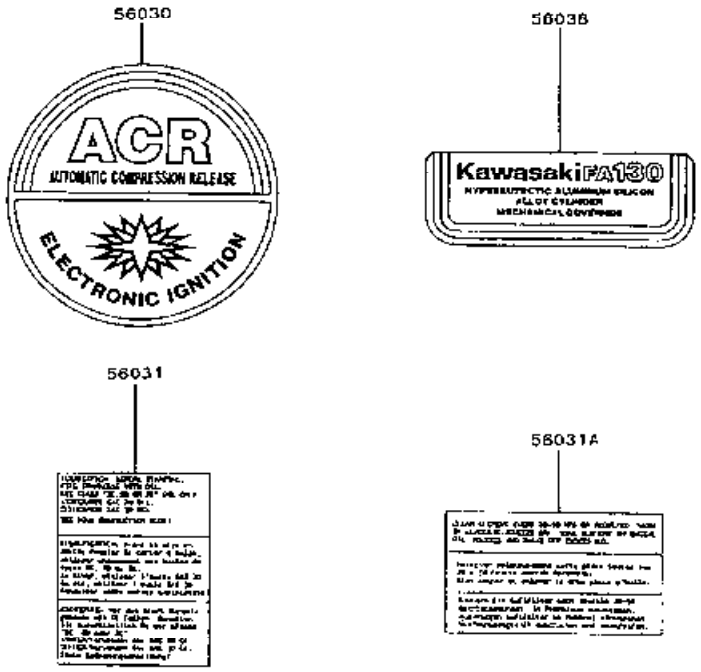

Copyright © 2003 Kawasaki Engine & Powerproducts. Alle Rechte vorbehalten.

PDFMAILER.DE
winload.de - Das ultimative Downloadarchiv für Free- & Shareware. Über 5000 Programme, da findet jeder das, was er braucht!

Katalogtitel
FA130D- S54

Block-Nr.
B-06

Blocktitel.
LUBRICATION-EQUIPMENT

Ref.- Nr.	Teile-nr.	Beschreibung
130	130D1014	Bolt-flanged
670	670B2015	Ring-o
11009	11009-2432	Gasket
16115	16115-2069	Cap-oil Filler

E0140-2090A

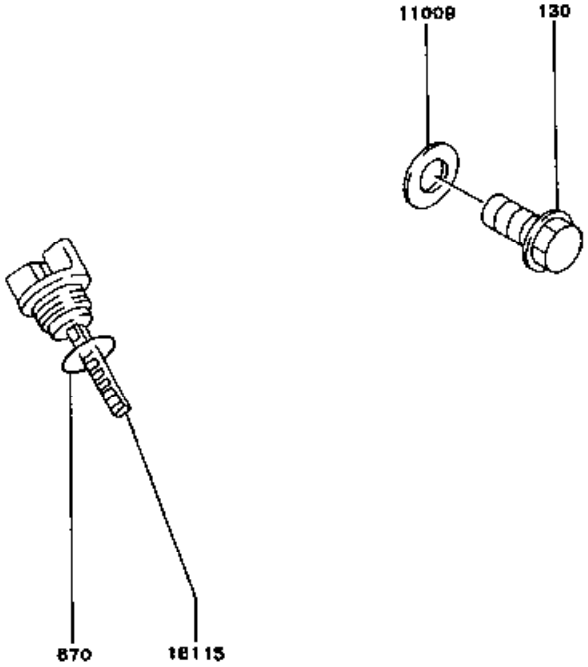

Copyright © 2003 Kawasaki Engine & Powerproducts. Alle Rechte vorbehalten.

PDFMAILER.DE winload.de - Das ultimative Downloadarchiv für Free- & Shareware. Über 5000 Programme, da findet jeder das, was er braucht!

Katalogtitel
FA130D- S54

Block-Nr.
B-04

Blocktitel.
PISTON/CRANKSHAFT

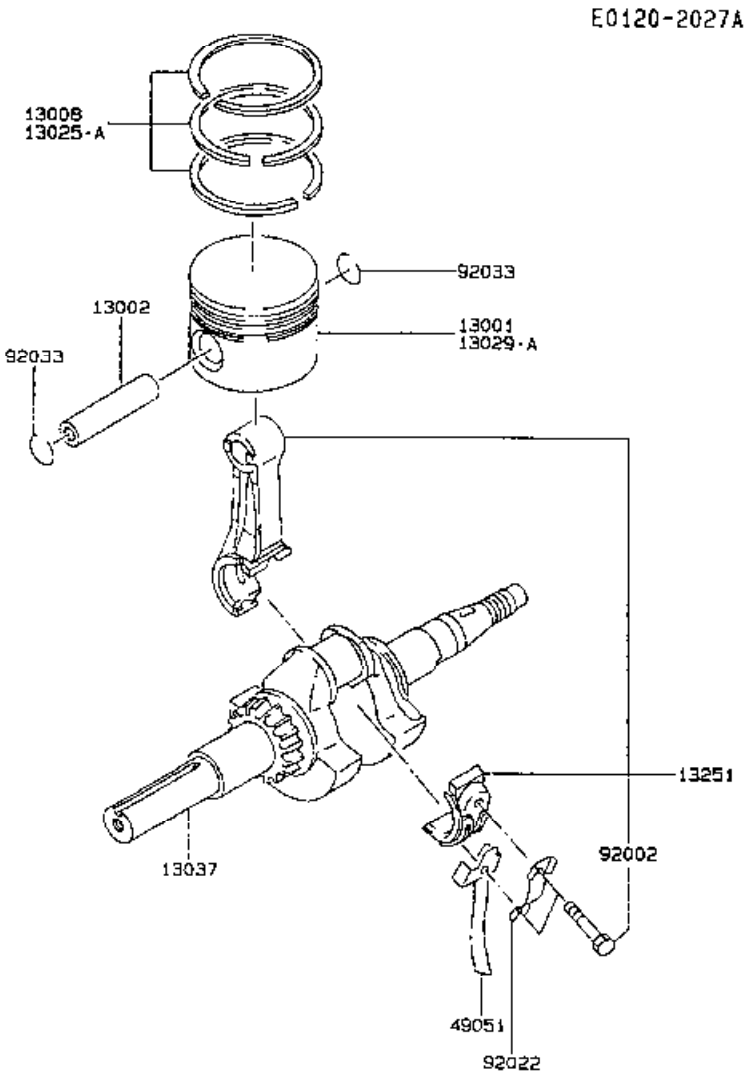

Ref.- Nr.	Teile-nr.	Beschreibung
13001	13001-2051	Piston-engine
13002	13002-2071	Pin-piston
13008	13008-6043	Ring-set-piston
13025	13025-2051	Ring-set-piston L,0.25
13025a	13025-2052	Ring-set-piston L,0.50
13029	13029-2051	Piston-engine L,0.25
13029a	13029-2052	Piston-engine L,0.50
13037	13037-2086	Crankshaft
13251	13251-6017	Rod-assy-connecting
49051	49051-2051	Splasher
92002	92002-2052	Bolt
92022	92022-2101	Washer
92033	92033-2051	Ring-snap

Copyright © 2003 Kawasaki Engine & Powerproducts. Alle Rechte vorbehalten.

PDFMAILER.DE winload.de - Das ultimative Downloadarchiv für Free- & Shareware. Über 5000 Programme, da findet jeder das, was er braucht!

Katalogtitel
FA130D- S54

Block-Nr.
C-04

Blocktitel.
STARTER

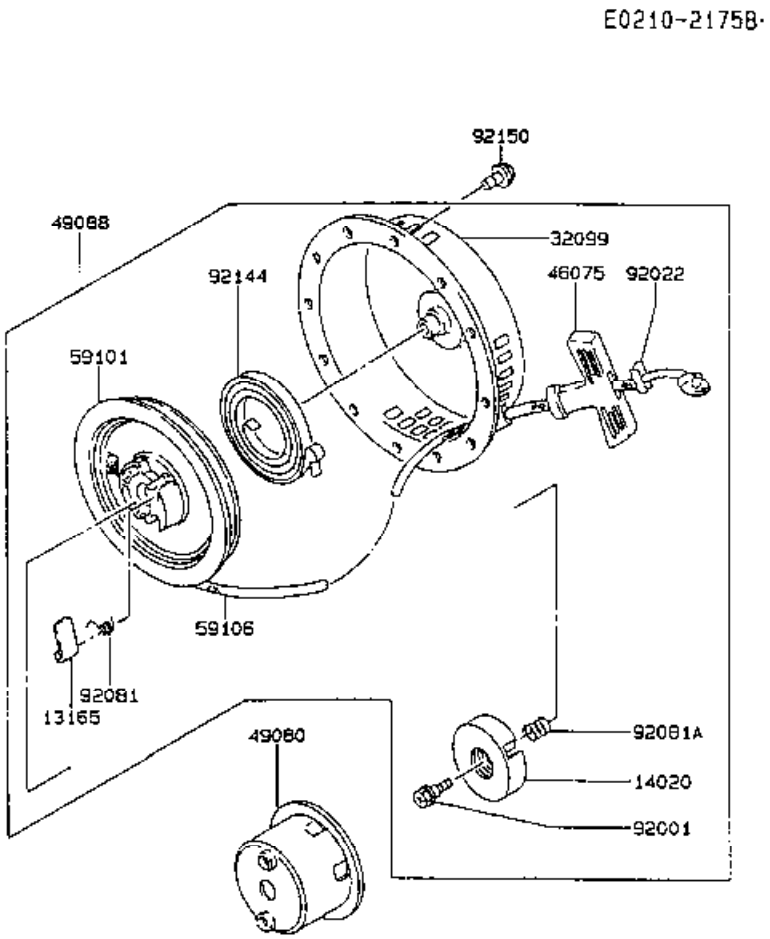

Ref.- Nr.	Teile-nr.	Beschreibung
13165	13165-2003	Pawl
14020	14020-2003	Retainer
32099	32099-2151-YK	Case,recoil Starter
46075	46075-2059	Grip,recoil Starter
49080	49080-2141	Pulley-starting
49088	49088-2321-YK	Starter-recoil
59101	59101-2077	Reel,recoil Starter
59106	59106-2098	Rope,4x1350
92001	92001-2027	Bolt
92022	92022-2248	Washer
92081	92081-2021	Spring
92081a	92081-2022	Spring
92144	92144-2055	Spring,recoil
92150	92150-2211	Bolt,6x8

Copyright © 2003 Kawasaki Engine & Powerproducts. Alle Rechte vorbehalten.

PDFMAILER.DE winload.de - Das ultimative Downloadarchiv für Free- & Shareware. Über 5000 Programme, da findet jeder das, was er braucht!

Katalogtitel
FA130D- S54

Block-Nr.
B-05

Blocktitel.
VALVE/CAMSHAFT

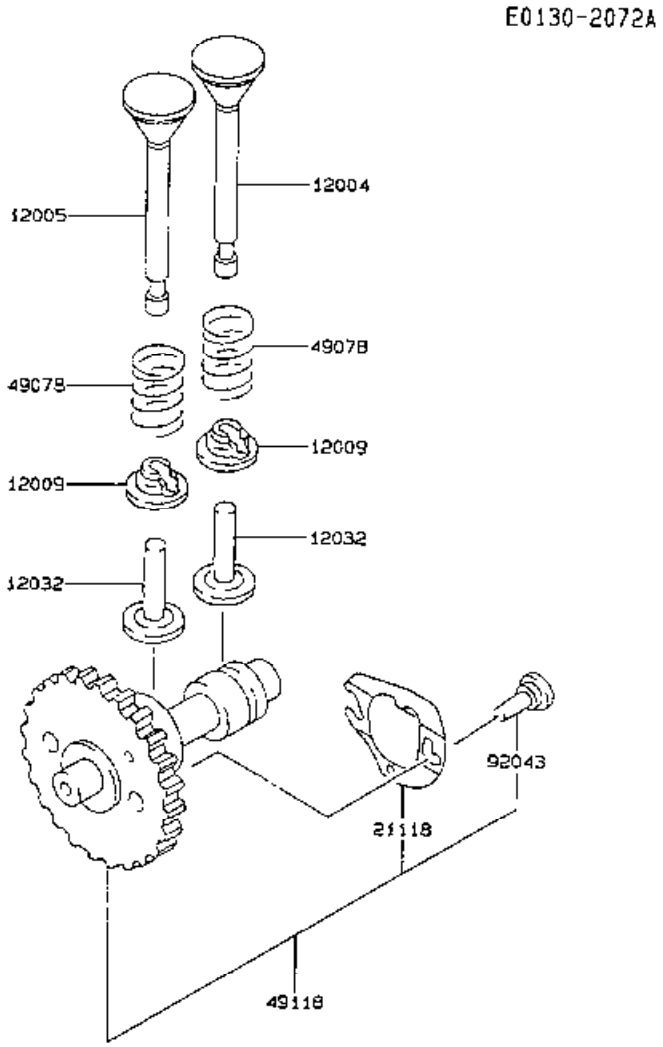

Ref.- Nr.	Teile-nr.	Beschreibung
12004	12004-2051	Valve-intake
12005	12005-2051	Valve-exhaust
12009	12009-2005	Retainer-valve Spring
12032	12032-2063	Tappet
21118	21118-2051	Decompressor
49078	49078-2051	Spring-engine Valve
49118	49118-2051	Camshaft-comp
92043	92043-2105	Pin

Copyright © 2003 Kawasaki Engine & Powerproducts. Alle Rechte vorbehalten.