JOIST
SICHERST DAS:
DAS ORIGINAL

717–3455
BDR–303

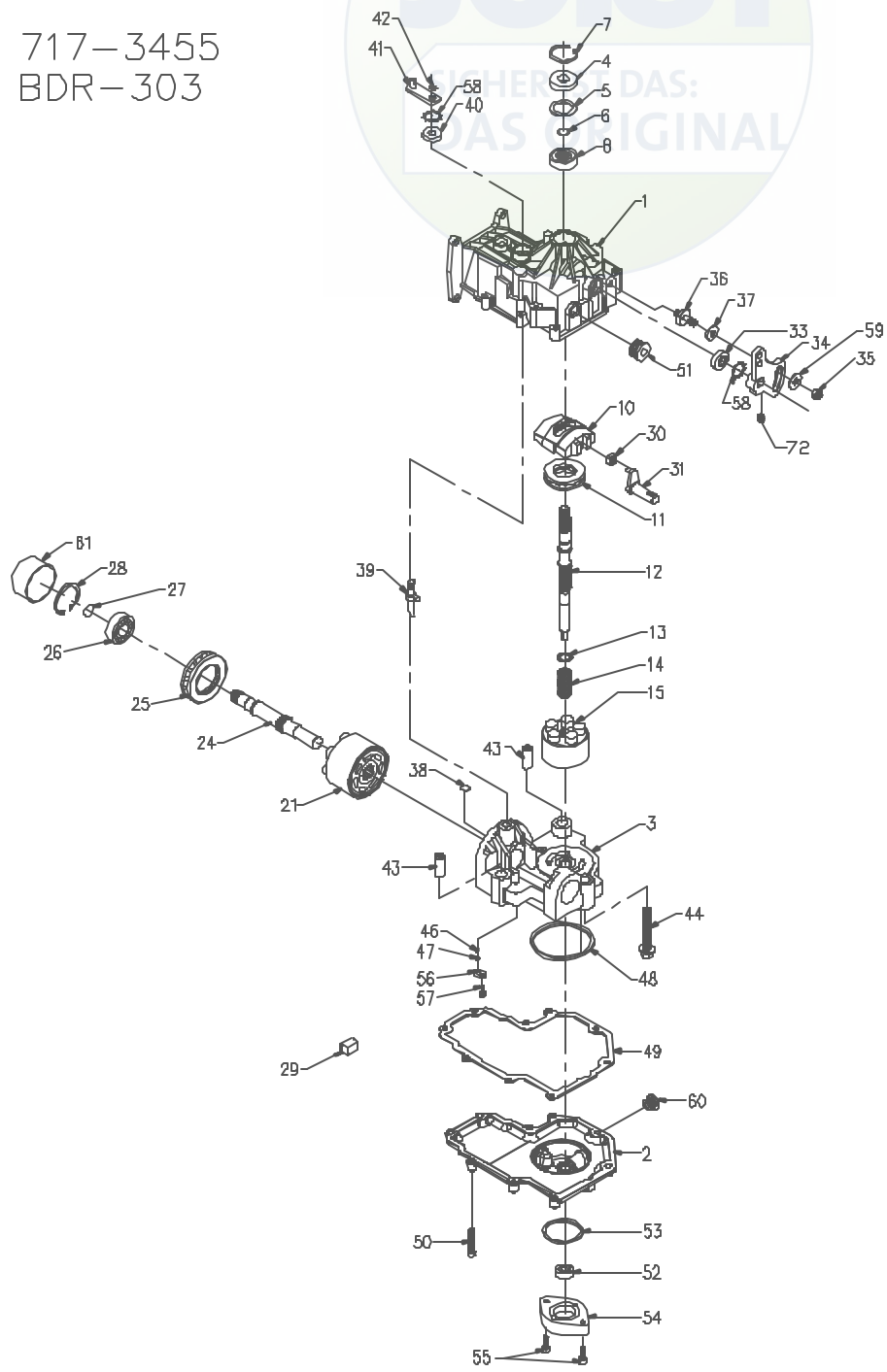

73 – SEAL KIT

Hydro-Gear

P 1 of 2 70328–S4

717–3455
BDR–303

ITEM #	PART #	QTY	DESCRIPTION
1	70304	1	UPPER HOUSING ASSEMBLY
2	50301	1	LOWER HOUSING
3	70299	1	CENTER SECTION ASSEMBLY
4	9008000–0128	1	LIP SEAL
5	2003018	1	SPACER
6	2003016	1	WIRE RETAINING RING
7	2003052	1	RETAINING RING
8	2003043	1	BALL BEARING
10	2003087	1	VARIABLE SWASHPLATE
11	50551	1	THRUST BEARING 30 X 52 X 13
12	50303	1	INPUT SHAFT
13	2003017	1	BLOCK THRUST WASHER
14	2003014	1	BLOCK SPRING
15	70331	1	10cc CYLINDER BLOCK ASSEMBLY
21	70082	1	21cc CYLINDER BLOCK ASSEMBLY
24	50304	1	OUTPUT (MOTOR) SHAFT
25	50552	1	THRUST BEARING 42 X 68 X 16
26	50315	1	BALL BEARING
27	2000022	1	WIRE RETAINING RING
28	50329	1	RETAINING RING
29	50649	1	RETAINER, MOTOR BEARING
30	2000015	1	SLOT GUIDE
31	2003005	1	TRUNNION ARM
33	51041	1	LIP SEAL
34	45007	1	CONTROL ARM

ITEM #	PART #	QTY	DESCRIPTION
35	50317	1	HEX LOCK NUT, 5/16–24
36	50426	1	STUD–SHORT, 5/16–24
37	50281	1	FRICTION PUCK
38	2003554	1	BYPASS PLATE
39	2003555	1	BYPASS ACTUATOR
40	45074	1	LIP SEAL
41	50270	1	BYPASS ARM
42	44870	1	RETAINING RING
43	50002	2	PIN
44	50016	3	SCREW
46	2000029	1	CHARGE RELIEF SPRING
47	9001214–2500	1	BALL
48	50578	1	O RING
49	50331	1	GASKET
50	44876	9	SCREW–SELF TAPPING
51	9005110–8700	1	DRAIN PLUG
52	50273	1	GEROTOR ASSEMBLY
53	9004101–1340	1	O RING
54	50260	1	GEROTOR COVER
55	50095	2	SCREW
56	50651	1	PLATE RELIEF
57	50653	1	SCREW
58	50650	2	RETAINING RING
59	44130	1	WASHER
60	9005200–5600	1	SHIPPING PLUG
61	50864	1	SHIPPING CAP
72	50018	1	SET SCREW
73	70490	1	SEAL KIT

Hydro-Gear

P 2 of 2 70328–S4