JOIST
SICHER IST DAS:
DAS ORIGINAL

848-0336
216-1010S

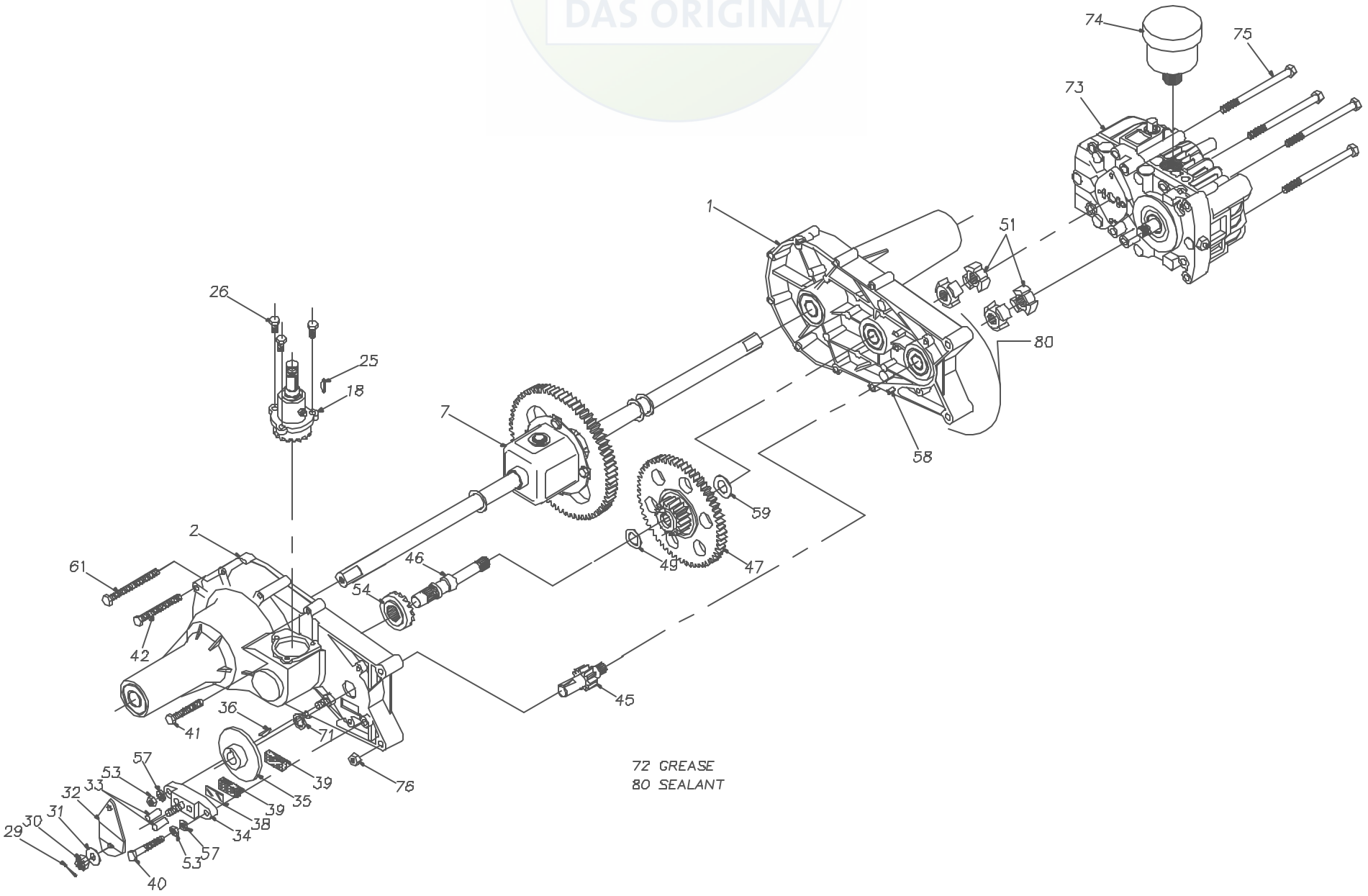

Hydro-Gear

848-0336
216-1010S

REF	HYDRO-GEAR PART NO	QTY	DESCRIPTION
1	62587	1	ASSY HOUSING, LH
		1	HOUSING, LH
		2	BALL BEARING, 3/4 ID X 40MM X 12MM
		2	BALL BEARING, .62 ID X 1.38 X .44
2	62586	1	ASSY HOUSING, RH
		1	HOUSING, RH
		2	BALL BEARING, 3/4 ID X 40MM X 12MM
		1	BALL BEARING, 35 OD X 15 ID
		1	BALL BEARING, .62 ID X 1.38 X .44
7	62701	1	ASSY DIFFERENTIAL (COMPLETE)
		1	LH AXLE, 3/4 DIA.
		1	RH AXLE, 3/4 DIA.
		2	MITER GEAR (SPLINED)
		2	HEX JAM NUT, 1/2-20
		1	FLANGE BEARING, 3/4 ID X 7/8 OD
		1	DIFFERENTAIL HOUSING
		1	FLANGE BEARING, 3/4 ID X 1.0 OD
		1	DIFFERENTAIL GEAR
		2	MITER GEAR, 1/2 ID
		1	CROSS SHAFT
		2	THRUST BEARING, 1/2 X 1 OD
		2	RETAINING RING
		4	DIFFERENTIAL LOCKING BOLT
18	62636	1	ASSY INPUT PINION HSG
		1	INPUT SHAFT
		1	RETAINING RING #5100-62
		1	RETAINING RING #5100-43
		1	INPUT HOUSING
		1	NEEDLE BEARING
		1	THRUST BEARING NTA-1018
		2	THRUST RACE TRA-1018
		1	KEY, HI-PRO
		1	INPUT 17T PINION
		1	WASHER
		1	NEEDLE BEARING (WITH SEAL)
		1	GREASE FITTING
25	44136	1	KEY, #4 HI-PRO 3/32 X 5/8 DIA
26	44122	3	SCREW, HEX W/PATCH 1/4-20 X 3/4 LG

REF	HYDRO-GEAR PART NO	QTY	DESCRIPTION
29	44101	1	PIN, COTTER
30	44142	1	NUT, CASTLE 5/16-24
31	44130	1	WASHER, FLAT .343 ID X .88 OD X .062 THK
32	44094	1	ARM, BRAKE ACTUATOR
33	44127	2	PIN, BRAKE ACTUATING
34	62589	1	ASSY BRAKE YOKE
		1	SQUARE HEAD BOLT
		1	BRAKE YOKE
35	44090	1	DISC, BRAKE
36	44143	1	KEY, HI-PRO 3/16 X 5/8 DIA
38	44134	1	PLATE, PUCK
39	44132	2	PUCK, BRAKE
40	44276	1	BOLT, HEX W/PATCH 1/4-20 X 1.50 LG
41	44123	4	BOLT, HEX SELF-TAP 1/4-20 X 2.00LG
42	44124	4	BOLT, HEX SELF-TAP 1/4-20 X 3.00LG
45	44083	1	SHAFT, PINION W/11 TOOTH GEAR
46	44080	1	SHAFT, DRIVE
47	62760	1	ASSY REDUCTION GEAR
		1	REDUCTION GEAR
		1	NEEDLE BEARING
		1	DOWEL PIN
		1	SEAL, 7/8 OD X 5/8 ID X 3/32
		1	THRUST WASHER
		1	WASHER, FLAT .62 ID X 1.0 OD X .05 THK
		1	WASHER, FLAT ..62 ID X 1.0 OD X .03 THK
49	44371	1	WASHER, FLAT .62 ID X 1.0 OD X .05 THK
51	44084	4	COUPLING (HALF)
53	43178	1	NUT, HEX 1/4-20
54	44079	1	GEAR, DRIVE PINION 17T
57	43177	1	WASHER, 1/4" SPRING LOCK
58	44269	2	PIN, ROLL 3/16 DIA X 1/2 LG
59	44125	1	WASHER, FLAT ..62 ID X 1.0 OD X .03 THK
61	44561	2	SCREW, HEX 1/4-20 X 3.50 LG
71	44378	1	SEAL, GREASE
72	50416	2	GREASE (10 OZ TUBE)
73	BDU10S-114	1	TRANSMISSION
74	2003081	1	RESERVOIR
75	44820	4	BOLT, 5/16-18 X 4-1/2
76	43083	2	HEX NUT, 5/16-18
80	50828	1	SEALANT

Hydro-Gear