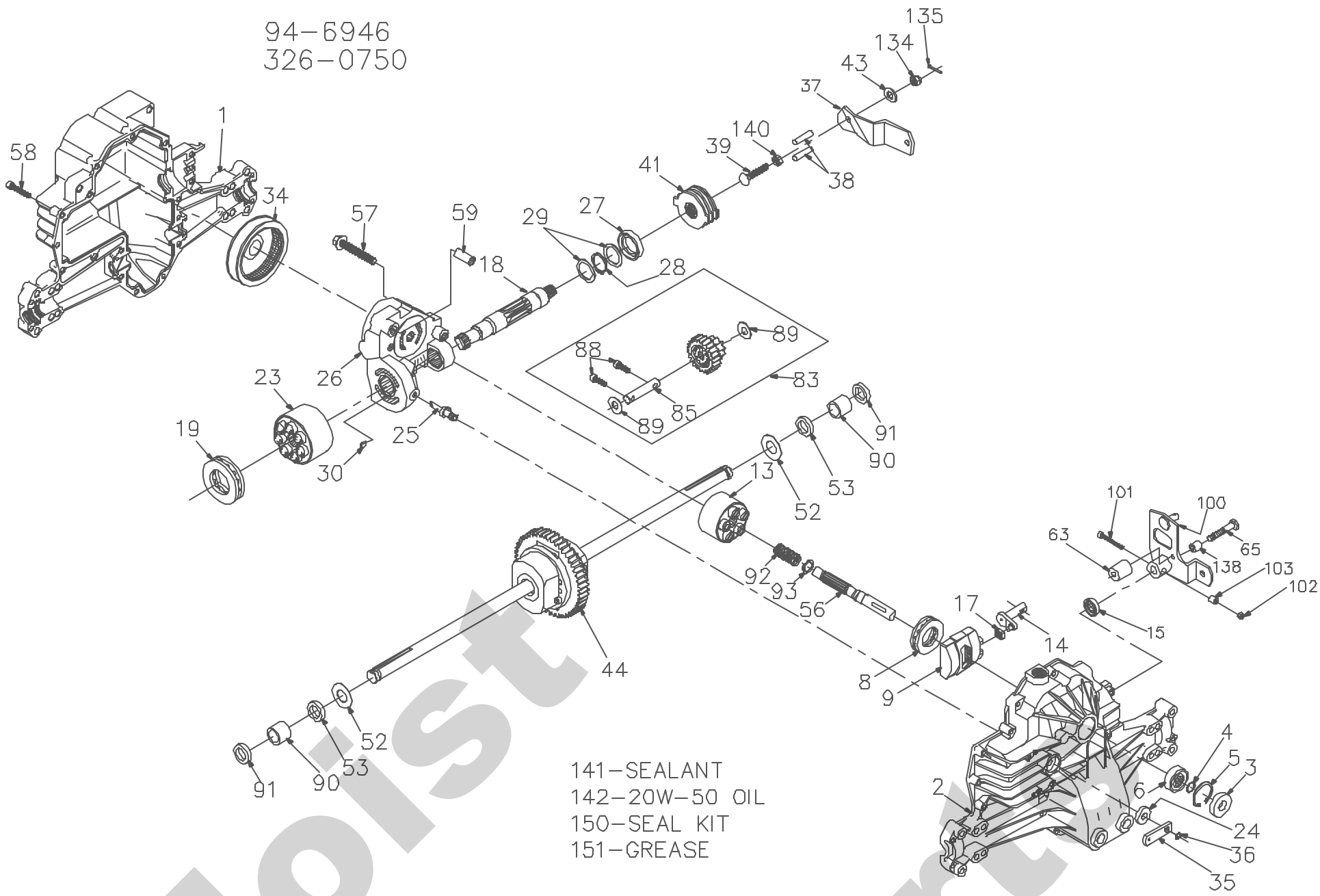

Hydro-Gear

P.1 of 2. 70253-S5

94-6946
326-0750

ITEM NO	HYDRO-GEAR PART NO	QTY	DESCRIPTION
1	50074RM	1	HOUSING, LOWER
2	70255	1	ASSEMBLY, UPPER HOUSING
		1	HOUSING, UPPER
		1	BEARING-TRUNNION JOURNAL
3	9008000-0128	1	SEAL-LIP
4	2003016	1	RING-WIRE RETAINING
5	2003052	1	RING-RETAINING
6	2003043	1	BEARING-SHAFT BALL
8	50551	1	BEARING-THRUST 30X52X13
9	2003087	1	SWASHPLATE-VARIABLE
13	70331	1	BLOCK-CYLINDER ASS'Y.
		1	BLOCK-CYLINDER
		5	PISTON
		5	PISTON SPRING
		5	PISTON SPRING WASHER
14	2003005	1	ARM-TRUNNION
15	9008000-0126	1	SEAL-LIP
17	2000015	1	GUIDE-SLOT
18	50449	1	SHAFT-MOTOR
19	50552	1	BEARING-THRUST 42X68X16
23	70082	1	BLOCK-CYLINDER (MOTOR) ASSY
		1	BLOCK-CYLINDER
		7	PISTON
		7	PISTON SPRING
		7	PISTON SPRING WASHER
24	45074	1	SEAL-LIP 10X25X7
25	2003555	1	ACTUATOR-BYPASS
26	70250	1	CENTERSECTION ASSEMBLY
		1	PLATE-BYPASS
		2	CHECK PLUG ASSEMBLY
		1	CENTER SECTION
		1	DU BEARING
		3	BOLT-3/8-24 X 2.5
		1	BUSHING
27	45075	1	SEAL-LIP 26X42X8
28	50007	1	RING-RETAINING
29	44872	2	WASHER-26X35X1
30	2003554	1	BYPASS PLATE
34	44964	1	OIL FILTER ELEMENT
35	44866	1	ARM-BYPASS
36	44870	1	RING-RETAINING
37	50131	1	ARM-ACTUATING
38	44891	2	PIN-ACTUATING
39	50316	1	BOLT-5/16-18 X 1-3/4
41	70135	1	BRAKE ROTOR/STATOR KIT
		4	STATOR-BRAKE
		2	ROTOR-BRAKE

ITEM NO	HYDRO-GEAR PART NO	QTY	DESCRIPTION
43	44130	1	WASHER-7/16 X 7/8 X .060
44	70130	1	DIFFERENTIAL ASSEMBLY
		1	GEAR-DIFF 50T
		2	DIFF. COVER
		2	GEAR-BEVEL 15T
		2	GEAR-PLANET 15T
		2	JAM NUT
		4	BOLT- 1/4-20 X 1 38
		1	AXLE SHAFT, RH
		1	AXLE SHAFT, LH
		2	BEARING, BLOCK
		1	SHAFT
52	50152	2	WASHER-3/4 X 1.5 X .03
53	45076	2	SEAL- .75 X 1.25 X .250
56	2003021	1	SHAFT-INPUT
57	50016	3	BOLT, 3/8-24 X 2.5
58	44876	21	BOLT- 1/4-20 X 1.38
59	50002	2	PIN- .5 OD X .43 ID X .750
63	50156	1	SPACER
65	44123	1	BOLT, 1/4-20 X 2.0
83	70132	1	JACK SHAFT/PINION GEAR ASSEMBLY
		1	23T GEAR
		1	10T PINION
		1	JACK SHAFT
		2	CAPSCREW 6M X 20 LG
		2	WASHER 7/16 X 1 X .5
85	50559	1	JACK SHAFT
88	50154	2	CAPSCREW 6M X 20 LG
89	50132	2	WASHER 7/16 X 1 X .5
90	50118	2	SLEEVE BEARING
91	50941	2	SEAL, LIP 0.75X1 00X0.158
92	2003014	1	SPRING, BLOCK
93	2003017	1	WASHER, BLOCK THRUST
100	50400	1	CONTROL ARM
101	50140	1	SOCKET HEAD CAP SCREW
102	50141	1	NUT, 10-24
103	50142	1	SPACER
134	44142	1	CASTLE NUT, 5/16-24
135	44101	1	COTTER PIN
138	23770	1	SPACER
140	50269	1	NUT, HEX 5/16-24
141	50928	1	SEALANT
142		81oz	20W-50 OIL
150	70312	1	SEAL KIT
151	50416	1	GREASE

Hydro-Gear

P 1 of 2 70253-S5

Joistspareparts