JOIST
SICHER IST DAS:
DAS ORIGINAL

144436
319–0750

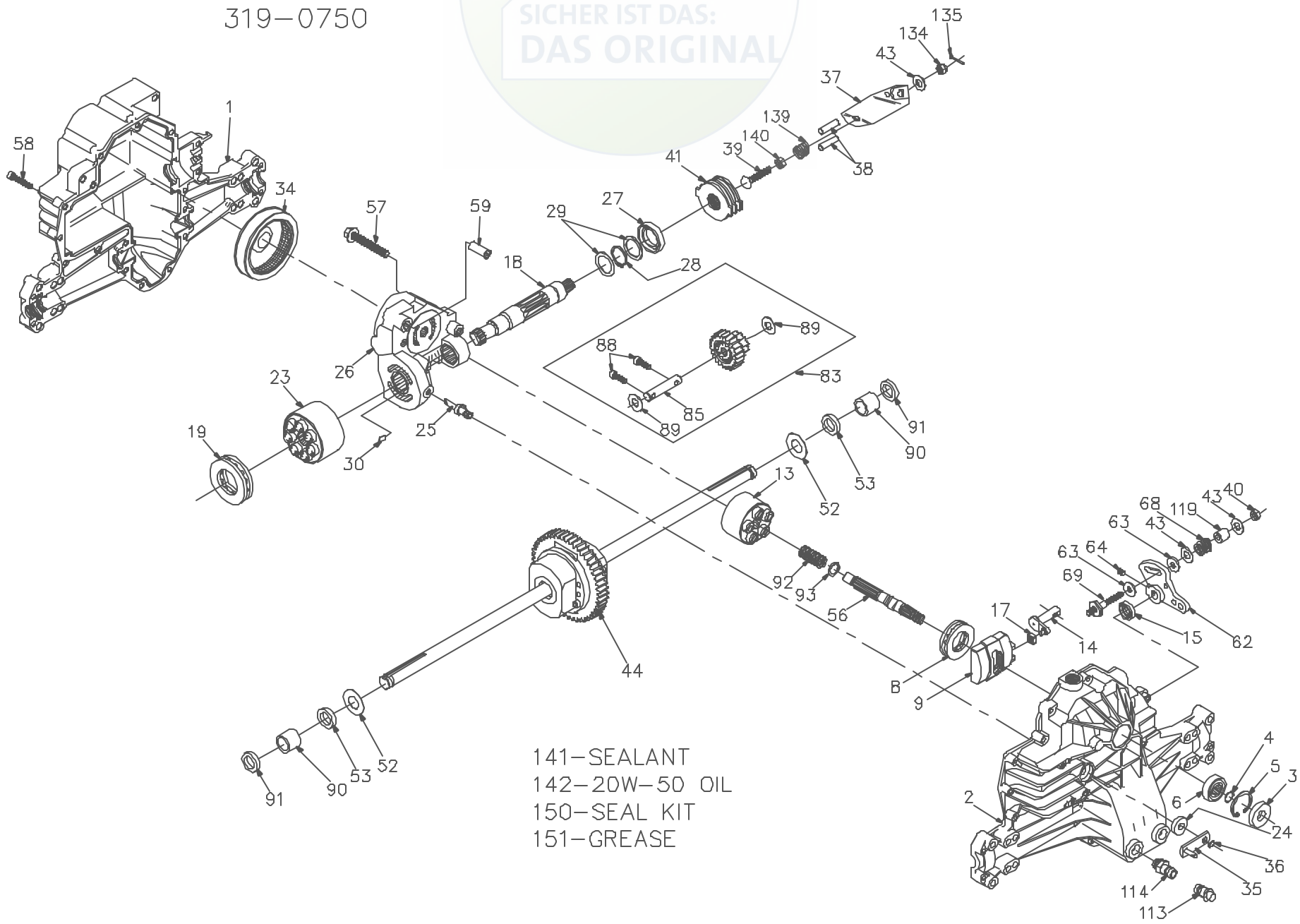

141–SEALANT
142–20W–50 OIL
150–SEAL KIT
151–GREASE

Hydro-Gear

P.1 of 2. 70117–S13

144436
319–0750

ITEM NO	HYDRO–GEAR PART NO	QTY	DESCRIPTION
1	50074RM	1	HOUSING, LOWER
2	70255	1	ASSEMBLY, UPPER HOUSING
		1	HOUSING, UPPER
		1	BEARING–TRUNNION JOURNAL
3	9008000–0128	1	SEAL–LIP
4	2003D16	1	RING–WIRE RETAINING
5	2003D52	1	RING–RETAINING
6	2003043	1	BEARING–SHAFT BALL
8	50551	1	BEARING–THRUST 30X52X13
9	2003D87	1	SWASHPLATE–VARIABLE
13	70331	1	BLOCK–CYLINDER ASS'Y.
		1	BLOCK–CYLINDER
		5	PISTON
		5	PISTON SPRING
		5	PISTON SPRING WASHER
14	2003D05	1	ARM–TRUNNION
15	9008000–0126	1	SEAL–LIP
17	2000015	1	GUIDE–SLOT
18	50449	1	SHAFT–MOTOR
19	50552	1	BEARING–THRUST 42X68X16
23	70082	1	BLOCK–CYLINDER (MOTOR) ASSY
		1	BLOCK–CYLINDER
		7	PISTON
		7	PISTON SPRING
		7	PISTON SPRING WASHER
24	45074	1	SEAL–LIP 10X25X7
25	2003555	1	ACTUATOR–BYPASS
26	70250	1	CENTERSECTION ASSEMBLY
		1	PLATE–BYPASS
		2	CHECK PLUG ASSEMBLY
		1	CENTER SECTION
		1	DU BEARING
		3	BOLT–3/8–24 X 2 5
		1	BUSHING
27	45075	1	SEAL–LIP 26X42X8
28	50007	1	RING–RETAINING
29	44872	2	WASHER–26X35X1
30	2003554	1	BYPASS PLATE
34	44964	1	OIL FILTER ELEMENT
35	50270	1	ARM–BYPASS
36	44870	1	RING–RETAINING
37	23710	1	ARM–ACTUATING
38	44891	2	PIN–ACTUATING
39	50316	1	BOLT–5/16–18 X 1–3/4
40	50317	1	NUT–HEX LOCK 5/16–24 UNJC
41	70135	1	BRAKE ROTOR/STATOR KIT
		4	STATOR–BRAKE
		2	ROTOR–BRAKE

ITEM NO	HYDRO–GEAR PART NO	QTY	DESCRIPTION
43	44130	3	WASHER–7/16 X 7/8 X .060
44	70130	1	DIFFERENTIAL ASSEMBLY
		1	GEAR–DIFF. 50T
		2	DIFF. COVER
		2	GEAR–BEVEL 15T
		2	GEAR–PLANET 15T
		2	JAM NUT
		4	BOLT– 1/4–20 X 1.38
		1	AXLE SHAFT, RH
		1	AXLE SHAFT, LH
		2	BEARING, BLOCK
		1	SHAFT
52	50152	2	WASHER–3/4 X 1.5 X .03
53	45076	2	SEAL– .75 X 1.25 X .250
56	50005	1	SHAFT–INPUT
57	50016	3	BOLT, 3/8–24 X 2.5
58	44876	21	BOLT– 1/4–20 X 1.38
59	50002	2	PIN– .5 OD X .43 ID X .750
62	50254	1	ARM–CONTROL
63	50281	2	PUCK–DAMPENER
64	50018	1	SET SCREW
68	50277	1	SPRING
69	50284	1	5/16–24 STUD
83	70132	1	JACK SHAFT/PINION GEAR ASSEMBLY
		1	23T GEAR
		1	10T PINION
		1	JACK SHAFT
		2	CAPSCREW 6M X 20 LG
		2	WASHER 7/16 X 1 X .5
85	50559	1	JACK SHAFT
88	50154	2	CAPSCREW 6M X 20 LG
89	50132	2	WASHER 7/16 X 1 X .5
90	50118	2	SLEEVE BEARING
91	50941	2	SEAL, LIP 0.75X1.00X0.158
92	2003014	1	SPRING, BLOCK
93	2003017	1	WASHER, BLOCK THRUST
113	70109	1	CAP–VENT ASSEMBLY
		1	CAP–POPPET VALVE
		1	PLASTIC VENT
114	70110	1	FITTING–O RING ASSEMBLY
		1	O–RING
		1	PLASTIC HOSE FITTING
119	50278	1	SPACER
134	44142	1	CASTLE NUT, 5/16–24
135	44101	1	COTTER PIN
139	50431	1	COMPRESSION SPRING
140	50269	1	NUT,HEX 5/16–18
141	50928	1	SEALANT
142		81oz	20W–50 OIL
150	70312	1	SEAL KIT
151	50416	1	GREASE

Hydro-Gear

P 2 of 2 70117–S13