AT 330 OHV

ALN 290W - 330W

cod. -A2743 SHORT BLOCK 330 STD
cod. -A2744 SHORT BLOCK 330 ELEST
cod. -A2745 SHORT BLOCK 330 VERT ELEST
cod. -A2746 SHORT BLOCK 290 STD
cod. -A2747 SHORT BLOCK 290 ELEST
cod. -A2748 SHORT BLOCK AT330 OHV STD
cod. -A2749 SHORT BLOCK AT330 OHV ELEST

Joist Spareparts Joist

RICAMBI - SPARE PARTS - ERSATZTEILE - PIECES DETACHEES - REPUESTOS

ALN - AT

(I) = valido fino al motore matr. n. 535491
valid up to engine serial No. 535491

(II) = valido dal motore matr. n. 535492
valid from engine serial No. 535492

ALN

750001
993012
296023
995040
676158
120120
771116
ALN290B 918152
ALN330B 918020
ALN290P 918022
ALN330P 918129
449105
579152
579151
-A2985 (AT)
676183
676176
992127
771159
746108
992012
449185
676179
AT 989175
AT 771159
AT 676182
AT -B0432 **(II)**
AT -A2754 **(I)**
227226
992007
449190
231223
993039
300166
449256
-A2985
579177
-B0425
997173
588148
447164
231269
989142
323009
993113
588149
930165
375121 ALN
447167
325231
588184
536116
046103
-A3163 (ALN)
-A2758 (AT)
992008
993110
894023
754104
ALN -A2466
AT -A2753
992011
746107
449108
AT -A2759
ALN290 -A2765
ALN330 -A2766
993025
763002
625039
841027
997206
536116
771179

ALN

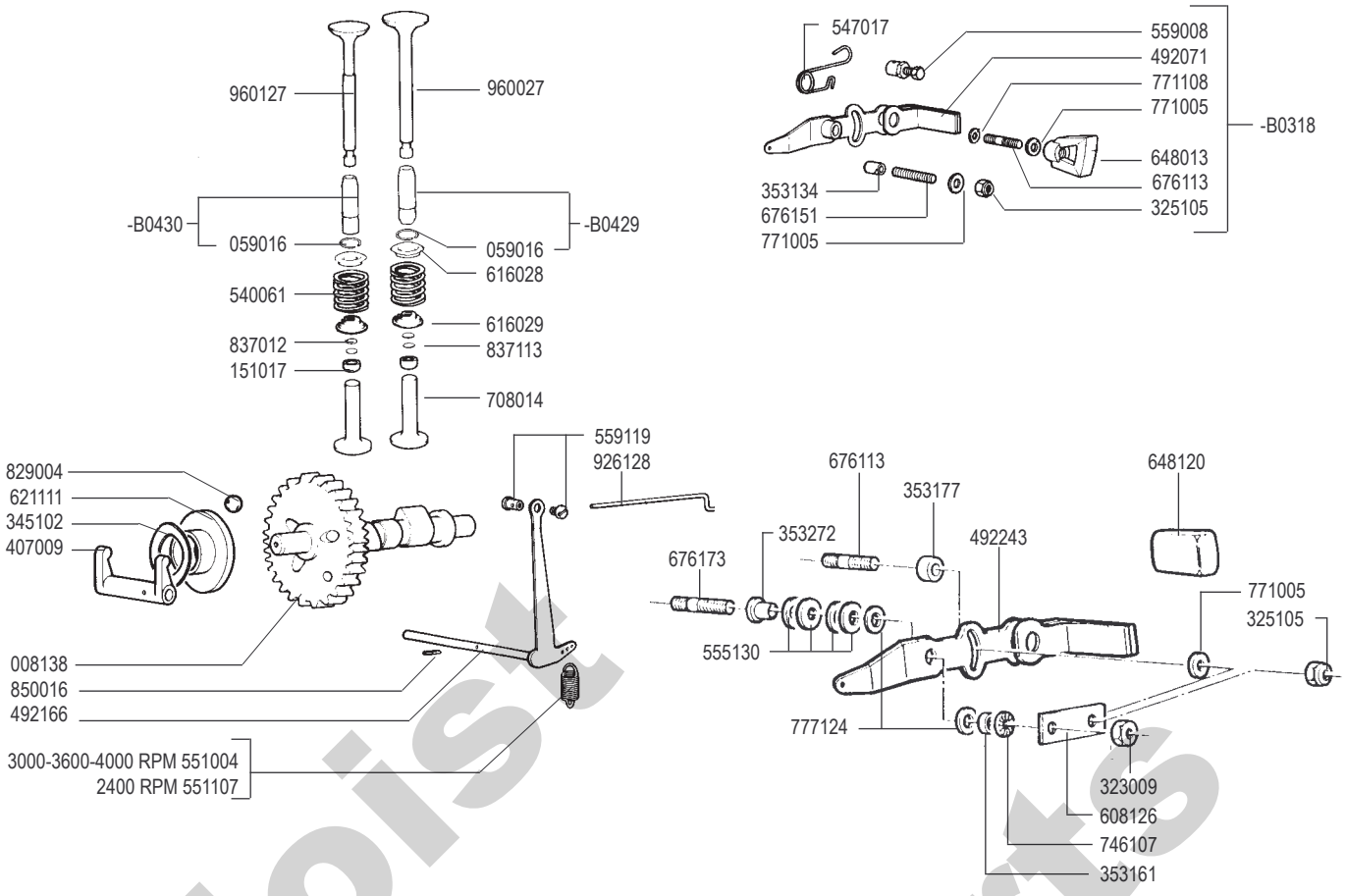

RICAMBI - SPARE PARTS - ERSATZTEILE - PIECES DETACHEES - REPUESTOS

AT

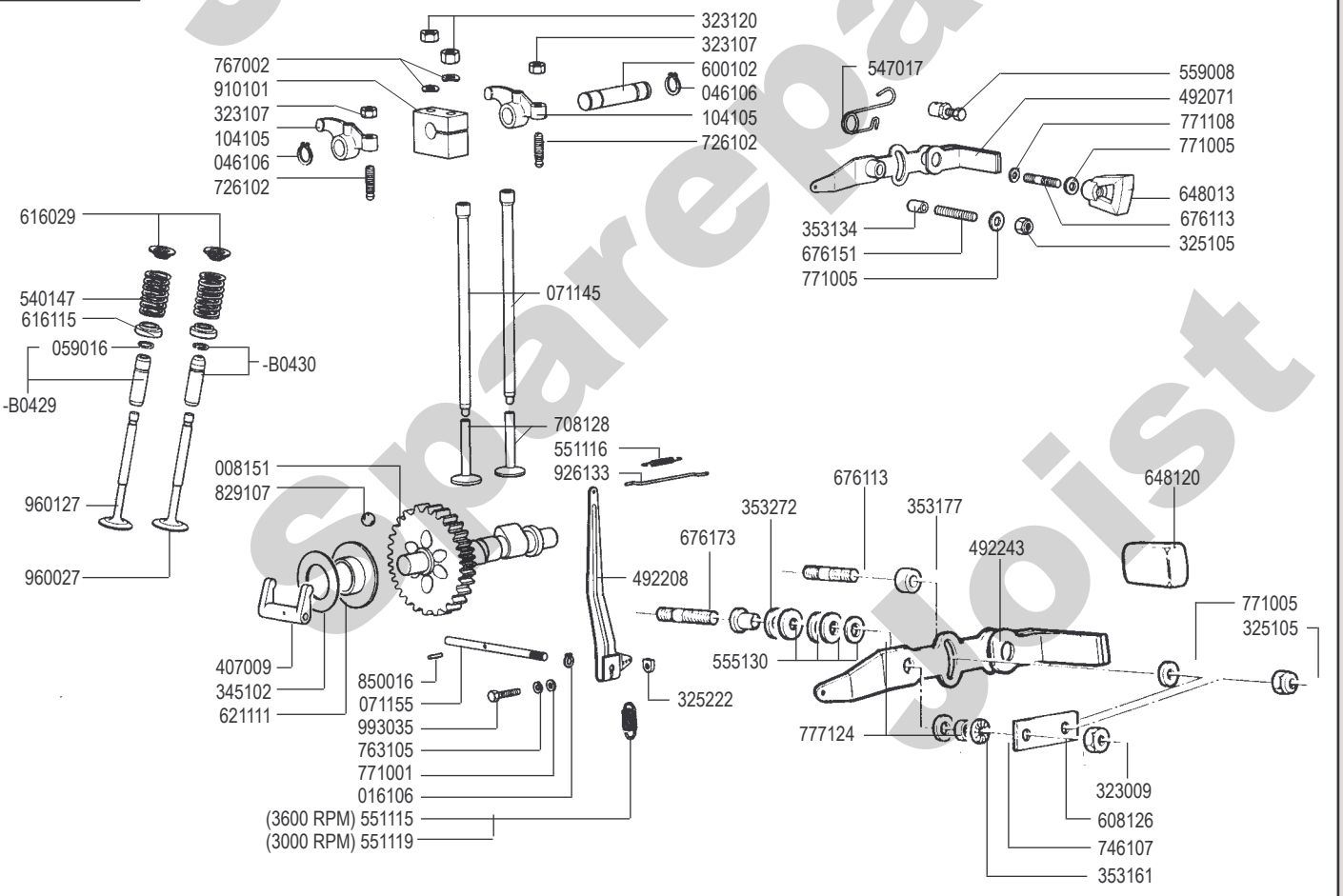

Joist Spareparts Joist

ALN - AT

ALN 290 (STD) -A2033
ALN 290 (+0,5) -A2034
ALN 290 (+1,0) -A2035
ALN-AT 330 (STD) -A2409
ALN-AT 330 (+0,5) -A2410
ALN-AT 330 (+1,0) -A2411

-A2037 (STD) ALN 290
-A2038 (+0,5) ALN 290
-A2039 (+1,0) ALN 290

-A2406 (STD) AT-ALN 330
-A2407 (+0,5) AT-ALN 330
-A2408 (+1,0) AT-ALN 330

854013
059017

151123
700107
325232

-A2757
080106
-A2467
080107
387138
151107
559131
147129 (B)
147130 (P)

--2289
054027
054016

106133 (ALN)
106117 (AT)
992011
746107

(STD) -A2417
(-0,25) -A2418
(-0,50) -A2419
608016
995048

771111
323104
696162
734114
976175 (AT)
976179 (ALN)

012115
468188
059197

304046
054027
771102
763002
993001

498014
304046
054016

-A2413
(ALN)

Joist Spareparts Joist

RICAMBI - SPARE PARTS - ERSATZTEILE - PIECES DETACHEES - REPUESTOS

ALN - AT

423101
771143
231188
059141
359104
922106
264119 (ALN)
264120 (AT)
375101 (ALN)
375102 (AT)

387141
(ALN)
387142
(AT)

387140
(ALN)

922105
579113
359101
059142
264118
375101

- A 2977
375109
387143 (ALN)
264121
555121
359121
359139

423103
750124
231251
059167
264138
387177
447174
359116
252103

995107
300160
992016
449126
353173
325236
(AT)

-A2978
992010
767001
771005
353170
449189
359139
359121
387167 (AT)
555121

AT

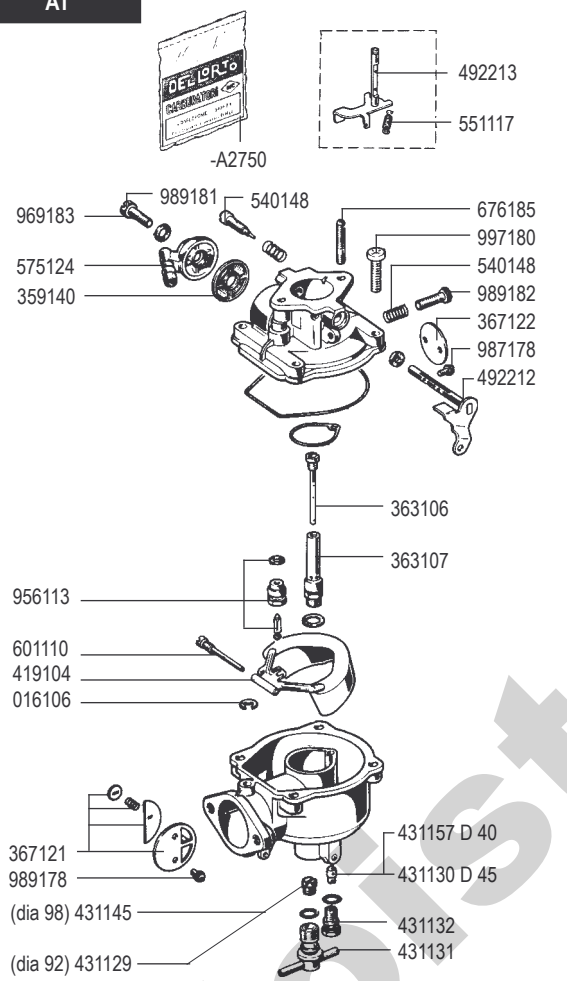

ALN

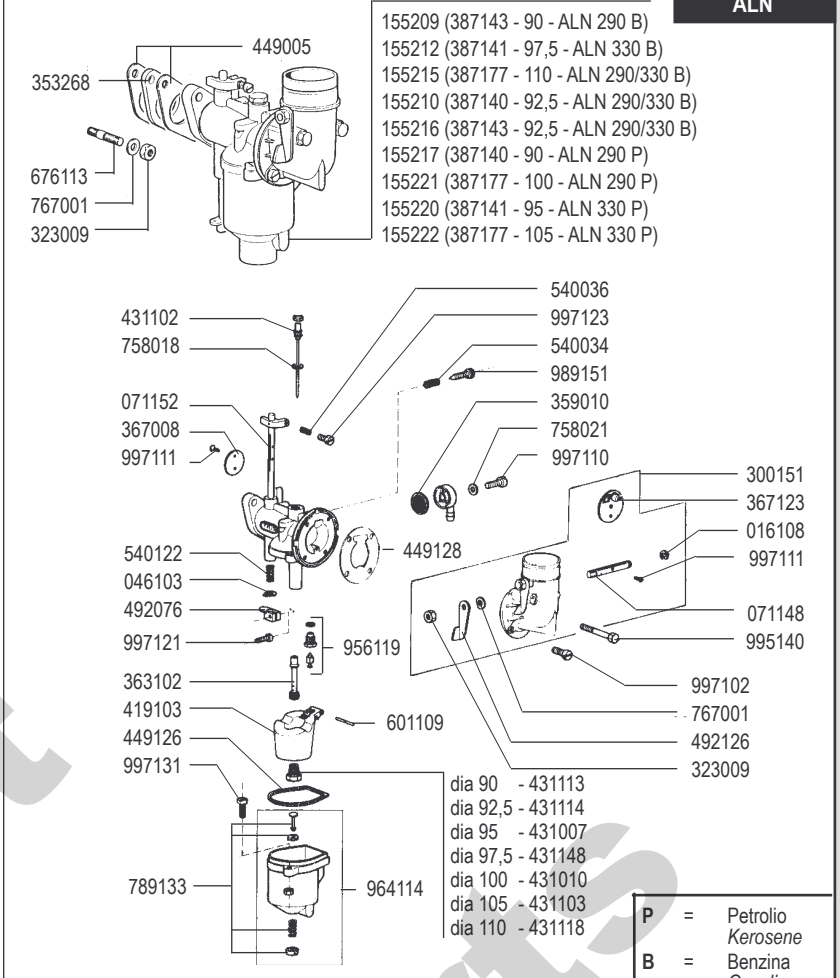

P	=	Petrolio *Kerosene*
B	=	Benzina *Gasoline*

RICAMBI - SPARE PARTS - ERSATZTEILE - PIECES DETACHEES - REPUESTOS

AT

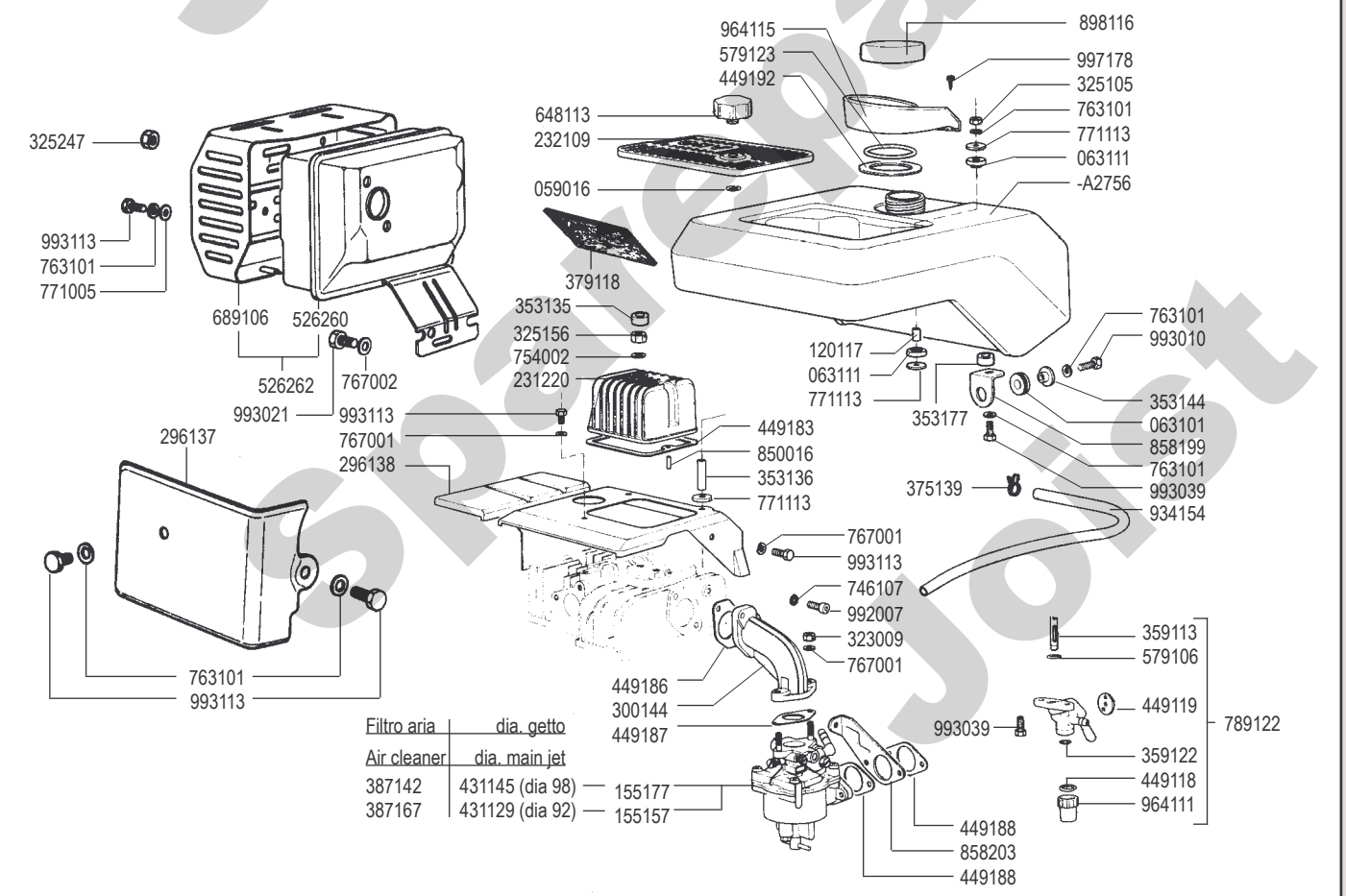

Filtro aria	dia. getto
Air cleaner	dia. main jet
387142	431145 (dia 98)
387167	431129 (dia 92)

Joist Spareparts Joist

ALN

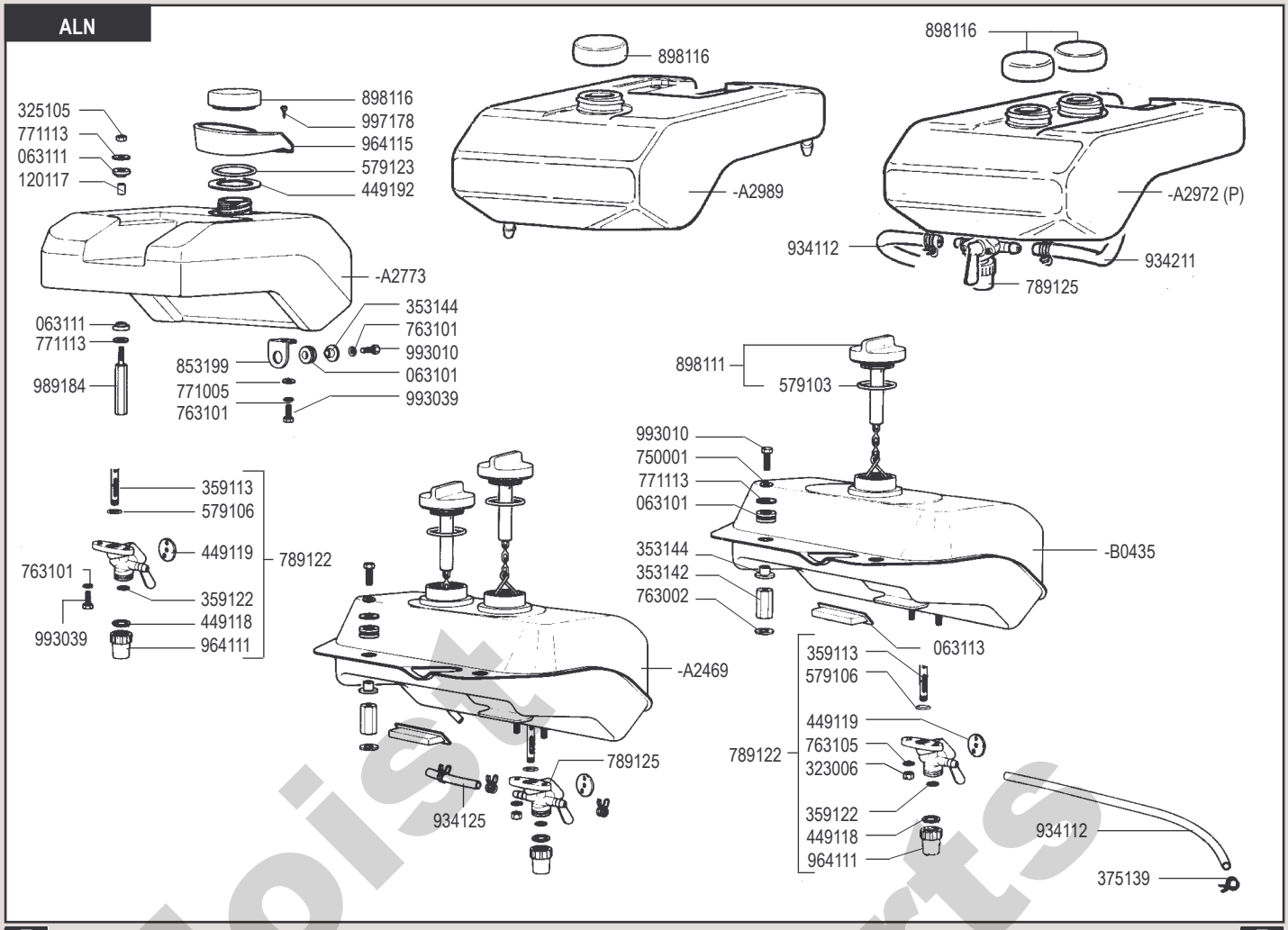

RICAMBI - SPARE PARTS - ERSATZTEILE - PIECES DETACHEES - REPUESTOS

ALN

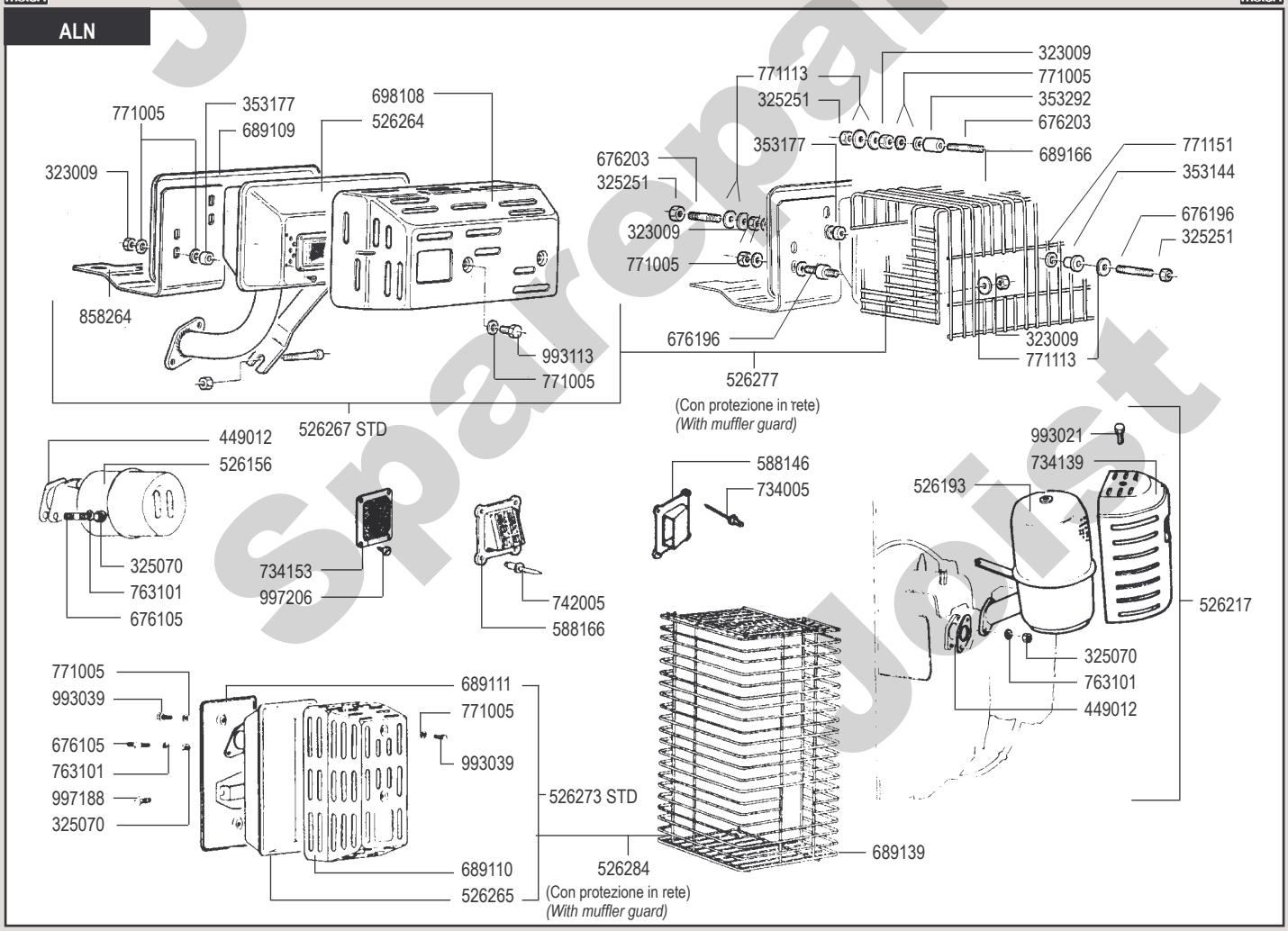

Joist Spareparts Joist

ALN- AT

-A3144
989191
448141
771005
993039
689120
689123 (AE-ES)
-A3145 (AE-ES)

-B0451
777121
231217
345119
555129
120131
704103
993113
989233
875237
-A2986
777120
767101
325218
046003
415106
777122
411115
448154
997204
771149
689181

231187
875187
767001
993113
120153
559146
608106
993108
120035
345120
120035
777104
415101
767006
046101
555115
704103
518115
411109
993113
771005
989201
771005
-A3455
448142
689126
989201
353177
-A3456
(A.E.-E.S.)
993113
771005
448142
689129 (A.E.-E.S.)
-A3082

A.E. = Per Avv elettrico
E.S. = For electric start

RICAMBI - SPARE PARTS - ERSATZTEILE - PIECES DETACHEES - REPUESTOS

ALN- AT

535110
674105
997039
559007
-A3230 (AT)
992011
746107
014125
708123
129106
771120
547111
600121
-A2767(ALN 290)
-A2768(ALN 330)
-A2762 (AT)
AE - ES
(ALN) 976228
256108
(AT) 976177
588023
563109
750004
993021
325218
563561
579045
563560
563558
563555
563557
746107
992011
858187
375148

A.E. = Per Avv elettrico
E.S. = For electric start

Joist Spareparts Joist

ALN - AT

850016
926148
997113
674115
492247
555142
612162
120166
120165
858260
120167
746109
995135
-A2881 (ALN)

-A3306 (AT)
431129
771005
993113
325105
875286
993010
993016
663002
423103
750124
231251
059167
510138
264138
375109
387177
447174
359116
252103

-A3296
(ALN)
423103
231251
750124
431118
375109
059167
510104
264138
387177
325105
993010
447174
359116
252103
874166
750004
993021

-A2882
(AT 330)
926149
553143
850016
858261
674115
997113
746108
993031

Joist spare parts

RICAMBI - SPARE PARTS - ERSATZTEILE - PIECES DETACHEES - REPUESTOS

ALN - AT

076137
992002
763101
323009
-A2984
930187
579147

691127	dia. 44	2A
691138	dia. 52	2A
691112	dia. 62	2A
691190	dia. 65	2A
691137	dia. 70	2A
691167	dia. 75	2A
691203	dia. 95	3A

A
D

771102
763002
993001

992023
750004
588137
993031

-A2783
559153
674137
383139
STOP
323009
993039
076140
-A3501

OIL WATCH
-A2964 (AT)
-A2967 (AT) A.E.-E.S.
-A2963 (ALN 330)
-A2966 (ALN 330) A.E.-E.S.
-A2962 (ALN 290)
-A2962 (ALN 290) A.E.-E.S.

A.E. = Per Avv elettrico
E.S. = For electric start

ALN V-W

992011
750001
771113
353134
-A3082
-A2530
387148
359121
993039
902109
375109
510131
227225
992027
579102
219111
155161
323027
750004
993031
789124
997176
232108
676105
300137
992007
992029
448123
-A2763 ALN 290VW
-A2764 ALN 330VW
012124
345102
993016
750004
875212
468160
526232
734139
526218
926126
498113
492177
894102
-A2529
993021
054118
054016
992016

Joist Spareparts Joist

RICAMBI - SPARE PARTS - ERSATZTEILE - PIECES DETACHEES - REPUESTOS

ALN

898116
-B0427
934187
716226
934191
375138
934215
754002
716156
533380
325105
934117
375139
993112
771001
652106
992002
325236
612167
-B0424

375139
934118
771001
746109
995107
120137
120142
858287
375132
934247
934262
789137

AT

898116
-B0428
934228
934191
716226
934120
934113
325236
858267
716156
754002
375138
231261
993112
771001
652106
375139
533380
-B0423

CODICE 178123
DATA 11/99
N REVISIONE 4
EMESSO IL 10/96

ACME SRL - 31049 VALDOBBIADENE (TREVISO) ITALY - VIA ERIZZO, 37 - TEL 0423 9701 - TELEFAX 0423 973623 - e-mail: mail@acmemotori.com Internet www.acmemotori.com